4.10 AMMONIA (NH_3) BY CHEMILUMINESCENCE

TABLE OF CONTENTS

4.10.0 METHOD SUMMARY 4.10-1

4.10.1 SAMPLE PROBE AND SHELTER CRITERIA 4.10-2
4.10.1.A SITE REQUIREMENTS 4.10-2
4.10.1.B SAMPLE TRAIN (PROBE AND GAS LINE) MATERIALS . . 4.10-4
4.10.1.C SHELTER 4.10-5

4.10.2 NH_3 INSTRUMENT CALIBRATION 4.10-6
4.10.2.A STANDARD REFERENCE MATERIALS 4.10-7
4.10.2.B CALIBRATION PROCEDURES 4.10-10

4.10.3 STANDARD OPERATING PROCEDURES 4.10-40
4.10.3.A EQUIPMENT 4.10-40
4.10.3.B QUALITY CONTROL (QC) PERFORMANCE CHECKS . . 4.10-43

4.10.4 PREVENTIVE MAINTENANCE 4.10-55

4.10.5 AUDIT PROCEDURES 4.10-58

4.10.6 DATA ACQUISITION, PROCESSING, AND REPORTING 4.10-58
4.10.6.A DATA VALIDATION 4.10-59
4.10.6.B DATA REDUCTION 4.10-61
4.10.6.C DATA QUALITY CONTROL 4.10-65
4.10.6.D STATISTICAL TRACKING 4.10-66
4.10.6.E DATA REPORTING 4.10-66

4.10.7 ASSESSMENT OF MONITORING DATA FOR PRECISION AND ACCURACY 4.10-67
4.10.7.A PRECISION 4.10-67
4.10.7.B ACCURACY 4.10-69

4.10.8 DATA QUALIFICATION 4.10-69

4.10.9 DATA SUBMISSION 4.10-70

4.10.10 EQUIPMENT DE-INSTALLATION 4.10-71

4.10.11 SAFETY PROCEDURES 4.10-7

4.10.0 METHOD SUMMARY

Ambient air concentrations of ammonia (NH_3) are indirectly photometrically measured as light intensities that result from the chemiluminescent reaction of nitric oxide (NO) with ozone (O_3) to form the activated NO_2^* species according to the reaction mechanism shown below:

$$NO + O_3 - NO_2^* + O_2$$

As the NO_2^* reverts to a lower energy state, it emits broad band radiation from 500 to 3000 nm (nanometers), with a maximum intensity at approximately 1100 nm. Since one NO molecule reacts with one O_3 molecule to form one NO_2^* molecule, the intensity of the resultant chemiluminescent radiation is linearly proportional to the NO concentration in the sample.

Before reacting with O_3, ambient air passes through two different converters to quantitatively convert total nitrogen (N_T) compounds to NO, and total nitrogen oxide (NO_x) compounds to NO. The difference between NO_x and N_T being the NH_3 concentration.

Interference from air pollutants commonly found in the environment (ozone, sulfur dioxide, carbon monoxide, and methane) are negligible for chemiluminescence N_T analyzers. The selectivity of the NO-O_3 reaction and the selective optical filters preclude almost all possible interferences. The only possible interferences of any significance are organic nitrates, organic nitrites, peroxyacetyl nitrate (PAN), and some amines. The ambient concentrations of these compounds are usually so low as to be insignificant. However, where relatively low concentrations of NH_3 occur simultaneously with high concentrations of PAN and other nitrogen-containing compounds (1:10 ratio), the interferences could be significant. If this situation exists, it is necessary to independently determine the interferant parameters' concentrations by gas chromatography, infrared spectroscopy, or other methods. If the interferant is determined to be significant, an equivalent method for NH_3 analysis that is not susceptible to these interferences should be selected.

The operating range for this method is 0 to 20.0 ppm NH_3. The method detection limit is 2 percent of full scale (i.e., 0.4 ppm for 0-20.0 ppm range). Various operating ranges between 0 to 0.5 ppm and 0 to 20.0 ppm may be selected (provided the NH_3 converter efficiency, at the selected full scale range. is maintained at $\geq$ 90 percent.

Thermal Oxidizer Converter (N_T, Total Nitrogen Converter)

As ambient air passes through the high-temperature thermal oxidizer, NH_3 and total nitrogen oxide (NO_x) compounds are quantitatively converted to nitric oxide (NO). The NO, which exists in ambient air with NH_3 and NO_2, passes through the thermal oxidizer unchanged and reacts with O_3, resulting in a total nitrogen (N_T) concentration of NO + NO_2 + NH_3.

In tests conducted at the ADEC Air Lab and in the field, ADEC found that high-temperature converters (operating at approximately 900°C) constructed of stainless steel #316, perform adequately. However, at these elevated temperatures, the converter (and associated plumbing) materials have a tendency to break down, requiring an increased frequency of maintenance and repairs. The addition of a catalyst (i.e., platinum wire) allows the high-temperature converter to operate at a reduced temperature and still maintain acceptable N_T converter efficiency.

NO_2 Converter (NO_x, Chemical Converter)

At the same time, ambient air passing through the nitrogen dioxide (NO_2) converter changes NO_2 to NO. The NO, which exists in ambient air, passes through the NO_2 converter and remains unchanged. NH_3 passing through the NO_2 converter, however, is not converted to NO. The resultant NO + converted NO_2 reacts with O_3, resulting in a total NO_x concentration of NO + NO_2. The NO_x value subtracted from the N_T concentration yields the NH_3 concentration, i.e.: $N_T - NO_x = NH_3$

where:	$NO+NO_2+NH_3 = N_T$	from the N_T converter; and
	$NO+NO_2 = NO_x$	from the NO_x converter.

The NO_x and the N_T measurements may be made either concurrently with a dual channel detection system, or cyclically with a single-channel system. As a rule, however, the cycle time for a single-channel system should not exceed two minutes.

4.10.1 SAMPLE PROBE AND SHELTER CRITERIA

4.10.1.A SITE REQUIREMENTS

The probe site criteria, as discussed below, must be followed to the maximum extent possible. It is recognized that there may be situations when the probe site criteria cannot be followed. If the site criteria cannot be met, this must be thoroughly documented with a written request for a waiver which describes how and why the site criteria differs. This documentation should help to avoid later questions about the data. The site criteria are discussed in 40 CFR Part 58, Appendix E.

The spatial scales of representativeness used in this appendix (i.e., micro, middle, neighborhood, urban, and regional) are defined and discussed in 40 CFR Part 58, Appendix D. Pollutant-specific probe site criteria generally apply to all spatial scales, except where noted otherwise. Specific site criteria that are prefaced with a "must" are defined as a requirement, and exceptions may be applied through the other provisions. However, site criteria that are prefaced with a "should" are defined as goals to meet for consistency, but are not requirements.

Ammonia (NH_3) Site Requirements:

1. Horizontal and Vertical Probe Placement--The height of the NH_3 inlet probe must be 3 to 15 meters above the ground. The distance from the inlet probe to any supporting structures must be greater than one meter vertically or horizontally.

2. Spacing from Obstructions--The site must be located away from any obstacles (such as buildings, trees, etc.) that may scavenge NH_3. The distance between the obstacle(s) and the inlet probe must be at least twice the height that the obstacle protrudes above the probe. A sampling station that is located closer to obstacles than this criterion allows, should not be classified as a neighborhood scale station, since the measurements from such a station would closely represent middle scale stations. Therefore, stations not meeting this criterion should be classified as middle scale.

   For similar reasons, a probe inlet along a vertical wall is undesirable because air moving along that wall may be subject to possible removal mechanisms. The inlet probe should be at least 20 meters from trees. Airflow must also be unrestricted in at least a 270 degree arc around the inlet probe, with the predominant wind direction for the season of greatest pollutant concentration included in the 270 degree arc. If the inlet probe is located on the side of a building, 180 degrees' clearance is required. The inlet probe should also be located on the windward side of the building relative to the predominant wind direction for the season of greatest pollutant concentration.

3. Spacing from Roads--It is important that the monitoring probe be located away from NH_3 and NO_x sources to avoid measurements being dominated by any one source. Further, the effects of roadway sources such as automotive traffic must be minimized by using separation distances for neighborhood and urban scale stations found in figure 4.10-1. The minimum separation distance must also be maintained between an NH_3 probe and any other similar volume of automotive traffic such as parking lots. Sampling stations that are located closer to roads than these criteria allow should not be classified as neighborhood or urban scale stations, but should generally be classified as middle scale.

MINIMUM SEPARATION DISTANCE BETWEEN NEIGHBORHOOD AND URBAN SCALE NO_2 STATIONS AND ROADWAYS (EDGE OF NEAREST TRAFFIC LANE)

Roadway Average Daily Traffic (vehicles per day)	Minimum Separation distance between roadways and station (meters)
less than or equal to 10,000	greater than or equal to 10
15,000	20
20,000	30
40,000	50
70,000	100
less than or equal to 110,000	greater than or equal to 250

Figure 4.10-1

4.10.1.B SAMPLE TRAIN (PROBE AND GAS LINE) MATERIALS

Ammonia is a fairly reactive gas. Gaseous ammonia readily adsorbs on certain solids and its decomposition rate is affected by the nature of the surface(s) in contact with the gas. Extreme care must be taken in selecting nonreactive and nonadsorptive sample train materials. At this time, insufficient information is known to establish individual requirements for the selection and use of all sample probe, gas manifold, gas line materials, etc. For this reason, the selection, design, and use of a sample train will follow guidelines set forth in, *USEPA Quality Assurance Handbook for Air Pollution Measurement Systems: Volume II. Ambient Air Specific Methods, Section 2.0, Sampling Considerations*. Each NH_3 monitoring installation will meet a minimum sample residence time specification for both the sample train residence time and sample/instrument response time. Additional sample train specifications are listed below:

- Sample probe and gas manifold material is to be glass;

- Filters--particulate filter(s), if used, must be glass or stainless steel 316 (s.s.316) or better. A particulate filter may only be used in the sample line (between the gas manifold and the analyzer). Prior to routine use, it is incumbent on the user/manufacturer to prove an in-line filter does not bias the reliability of the analyzer to measure actual concentrations of NH_3 in ambient air. The continued

reliability of these filter(s) must be reconfirmed periodically as part of the routine maintenance program;

- Valve(s) material is to be glass, s.s.316 (or better), or Teflon;

- Gas Lines--gas lines including sample, span, and calibration lines, must be either Teflon, stainless steel, or glass, to minimize NH_3 and NO_x adsorption on the surface of the lines. The residence time within the sampling line should be minimized to reduce the possibility of reactive gas interactions. The lines should be as short as possible.

NOTE: Glass is the ideal material for use with NH_3. Although stainless steel 316 appears to have fewer adsorptive properties toward NH_3 than Teflon, 1/8 inch Teflon tubing appears to perform acceptably.

- Sample Train Gas Residence Time (from NH_3 test gas introduced at sample probe inlet to first upscale NH_3 analyzer response): < 10 seconds preferred, < 20 seconds acceptable.

Physical demonstration of compliance for Sample Line Residence Time should be conducted on site;

- Acceptance Testing for Instrument Response Time--Span gas must be introduced at the back of the analyzer. The NH_3 analyzer must respond to the NH_3 span gas within the following specifications:

<7 minutes for 90 percent response to span gas, and

<12 minutes for 95 percent response to span gas.

Note: Prior to performing the instrument response test, ensure the calibration system (including fittings, sample lines, etc.) is fully equilibrated with NH_3 span gas.

- If filters are used in the sample introduction system, the system must be tested to prove that the filters do not bias the analysis of actual ambient NH_3. These checks must be conducted at calibration, and at periodic intervals thereafter, to test the integrity of the sample introduction system. It is up to the agency operating these monitors to design and implement these checks. As with all instrument checks, documentation is a required QA activity.

4.10.1.C SHELTER

The monitoring shelter's role is to provide a temperature-controlled environment in

which the sampling equipment can operate at optimum performance. The mean shelter temperature should be within 15 to 30°C. Daily fluctuations should not exceed ±2°C (±5°F). A continuous recording thermograph should be installed at the shelter to record daily fluctuations in temperature continuously. Fluctuations greater than ±2°C may cause the electronic components of the analyzer to drift and may introduce error into the data. For this reason, excursions outside the specifications should be flagged to indicate possible questionable data.

In addition to a temperature-controlled environment, it is highly recommended that all power supplied to sensitive monitoring equipment be conditioned. Appropriate selection of a power conditioner for the monitoring area will minimize equipment failure and loss of data.

4.10.2 NH_3 INSTRUMENT CALIBRATION

The accuracy and validity of measurement data recorded by air monitoring equipment depends on the quality assurance procedures used. The primary procedure is dynamic calibration, which determines the relationship between the observed and the actual values of the variable being measured.

In dynamic multi-point calibration, an instrument's responses are related to successive gas samples of known concentrations. A minimum of four reference points and a zero point are recommended to derive the calibration relationship. The "true" value of each NO cylinder gas or NH_3 permeation tube or cylinder gas must be traceable to a National Institute of Standards and Technology-Standard Reference Material (NIST-SRM) or a Certified Reference Material (CRM).

Analyzers used for monitoring NH_3 in the ambient air must be chemiluminescent NO_2 analyzers with a high temperature converter for oxidizing NH_3 to NO. These chemiluminescence analyzers are nitric oxide (NO) analyzers that rely on the conversion of NH_3 to NO to measure NH_3 concentrations. To establish this relationship, the analyzer must be calibrated to NO since: 1) the analyzer operates on the principals of measuring NO, not NH_3, and 2) the NO cylinder gas used is a primary standard. A separate multipoint calibration relating NH_3 gas to the analyzer's response must also be established.

Ideally, 100 percent of the NH_3 passing through the high temperature thermal oxidizer should be converted to NO. With 100 percent conversion of NH_3 to NO, the NH_3 calibration curve should mirror the NO calibration curve (i.e., slopes and y intercepts should be about the same for all the calibration curves generated). NH_3 converter efficiency is defined by:

NH_3 Converter Efficiency = (NH_3 slope of the N_T channel)/(NO slope of the N_T channel) X 100

where: NH_3 slope = slope from the linear regression equation of the NH_3 calibration gases versus the corresponding analyzer's N_T channel instrument responses; and

NO slope = slope from the linear regression equation of the NO gases versus the corresponding analyzer's N_T channel instrument responses.

Acceptable operation of the NH_3 converter requires that:

NH_3 slope of the N_T channel $\geq$ 90 percent and $\leq$110 percent of the NO slope of the N_T channel.

The ammonia monitor will require a new calibration whenever any one of the following conditions occur:

- three months has elapsed since the last calibration;
- following the replacement of any major component(s) of the NH_3 analyzer and monitoring system;
- whenever the monitor fails a performance audit;
- whenever the monitor fails a precision quality control (QC) check;
- whenever a zero/span NH_3 gas check is not within ± 10% tolerance of the corresponding zero/span NO gas concentration;
- whenever the analyzer's converter efficiency falls below 90 percent;
- following physical relocation of the monitor;
- an interruption of more than three days in analyzer operation; or
- any other indication, such as excessive zero or span drift or malfunction of the NH_3 monitoring system.

The recommended methods of dynamically calibrating an ammonia analyzer are:

METHOD A--Dynamic Dilution of a High Concentration NO Cylinder Gas to calibrate the NO_x and N_T channel, and Dynamic Dilution of an NH_3 Permeation Device to establish the correlation of the NH_3 output to the NO calibration;

METHOD B--Dynamic Dilution of a High Concentration NO Cylinder Gas to calibrate the NO_x and N_T channel, and Dynamic Dilution of a High Concentration

NH_3 Cylinder Gas to establish the correlation of the NH_3 output to the NO calibration.

4.10.2.A STANDARD REFERENCE MATERIALS

To assure data of desired quality, the NH_3 measurement process must be under defined control limits to ensure that systematic errors, when combined with random variations in the measurement process, result in only a small level of uncertainty.

Good data quality requires that quality control checks and independent audits be performed to assess the measurement process. These tasks necessitate maintaining good data recording practices and using materials, instruments, and measurement procedures traceable to reference standards of known quality. To establish traceability, multiple measurements must be made of standard reference materials (primary, secondary, and/or working standards), and process control procedures must be established. More specifically, working calibration standards must be traceable to standards of higher accuracy, such as National Institute for Standards and Technology-Standard Reference Material (NIST-SRM), Certified Reference Material (CRM), or NIST Traceable Reference Material (NTRM).

4.10.2.A.1 ZERO AIR

Dry zero air, verified to be free of contaminants that would cause detectable responses in the NH_3 analyzer, may be purchased in high-pressure gas cylinders or generated with commercially available clean air systems. Care should be taken to ensure that an ambient concentration of carbon dioxide (CO_2), approximately 350 ppm CO_2, is maintained in any zero air source used.

4.10.2.A.2 NITRIC OXIDE (NO) CYLINDER GAS

NO Concentration Standard--NO cylinder gas must contain a known concentration of NO in Nitrogen (N_2) with an NO_2 concentration <2 percent of the NO concentration. NO cylinder calibration gases must be traceable to either an NIST-SRM, CRM, or NTRM cylinder gas.

4.10.2.A.3 AMMONIA (NH_3) CYLINDER GAS

NH_3 Concentration Standard--Certified NH_3 cylinder gas is commercially available. However, caution should be used since NH_3 cylinder gas may be unreliable in its ability to maintain its original blended concentration over time. Over the past five years, NH_3 in N_2 cylinder gases with concentrations greater than 100 ppm have shown good stability. Therefore, every 12 months, NH_3 in N_2 cylinder gases above 100 ppm NH_3 cylinder gases must be compared to another NH_3 gas source of known reliability. However, NH_3 gases below 100 ppm NH_3 must be compared to another NH_3 gas

source of known reliability every six months.

Since NH_3 cylinder gas may be unstable over time, It is incumbent on the user to monitor the long-term stability of the stated NH_3 cylinder gas. If the cylinder gas shows any indication of instability, it must be removed from service, and replaced with an NH_3 gas standard of known reliability.

4.10.2.A.4 AMMONIA PERMEATION DEVICES

NH_3 concentration standard--NH_3 permeation device(s) suitable for generating NH_3 concentrations at the flowrates over the required concentration range are required. The NH_3 permeation device must be certified traceable to an NIST-SRM, CRM, or NTRM source.

4.10.2.B CALIBRATION PROCEDURES

Dynamic calibration systems based upon gas dilution systems may be used to dilute either a high concentration NO or NH_3 cylinder gas, or used to dilute an NH_3 permeation device to calibrate an NH_3 analyzer, provided they meet the following requirements.

The NH_3 and NO Cylinder Gas Dilution System must contain:

1. air flow controllers capable of maintaining constant air flows within ±2 percent of the required flowrate;

2. component parts in contact with NH_3 and NO_x gases are to be of non-reactive and non-adsorbent material (glass, Teflon, or s.s.316);

3. an air flow indicator capable of measuring and monitoring flows with an accuracy of ±2 percent of the measured flowrate. In addition, each flow meter must be calibrated to an NIST-traceable source (soap bubble meter, wet test meter, laminar flow element);

4. pressure regulators for use with NO or NH_3 cylinder gas must have non-reactive and non-adsorptive diaphragms and internal parts. In addition, the pressure regulator must have a suitable delivery pressure;

5. a chamber designed to provide thorough mixing of reaction products and diluent air must be constructed of glass (preferred) or other non-reactive and non-adsorbent material; and

6. an output manifold constructed of glass (preferred), Teflon, or non-reactive and non-adsorbent material. The manifold should be of sufficient diameter to ensure an insignificant pressure drop at the analyzer connection. The

system must have a vent designed to ensure atmospheric pressure at the manifold and to prevent ambient air from entering the manifold.

The NH_3 Permeation Device Dilution System must contain:

1. air flow controllers capable of maintaining constant air flows within ±2 percent of the required flowrate;

2. component parts in contact with NH_3 and NO_x gases must be constructed of non-reactive and non-adsorbent material (glass, Teflon, or s.s.316);

3. an air flow indicator capable of measuring and monitoring flows with an accuracy of ±2 percent of the measured flowrate. In addition, each flow meter must be calibrated to an NIST-traceable source (soap bubble meter, wet test meter, laminar flow element);

4. a constant temperature chamber capable of housing the permeation device(s) and maintaining its temperature to within ±0.1°C;

5. a drier and scrubber(s) to remove moisture and contaminants from the permeation device air system;

6. a chamber designed to provide thorough mixing of reaction products and diluent air constructed of glass (preferred) or other non-reactive and non-adsorbent material; and

7. an output manifold constructed of glass (preferred), Teflon, or non-reactive and non-adsorbent material. The manifold should be of sufficient diameter to ensure an insignificant pressure drop at the analyzer connection. The system must have a vent designed to ensure atmospheric pressure at the manifold and to prevent ambient air from entering the manifold.

Two methods exist for using NO gas as a primary standard:

1. METHOD A--Dynamic Dilution of a High Concentration NO Cylinder Gas to calibrate the NO_x and N_T channel, and NH_3 Permeation Tube to establish the correlation of the NH_3 output to the NO calibration.

2. METHOD B--Dynamic Dilution of a High Concentration NO Cylinder Gas to calibrate the NO_x and N_T channel, and Dynamic Dilution of a High Concentration NH_3 Cylinder Gas to establish the correlation of the NH_3 output to the NO calibration.

NOTE: In addition to METHOD A and METHOD B, the NH_3 analyzer must

also be tested for sufficient NO_2 converter efficiency. There are two methods currently in use for determining NO_2 converter efficiency. These methods are covered in more detail later in this section. To reduce the amount of time required to perform a complete calibration, it is recommended to conduct the NO calibration followed by the NO_2 portion of the calibration. Conducting the NH_3 calibration last will reduce the amount of wait time required to accomplish the entire calibration.

The NH_3 analyzer will require a new calibration whenever one of the following conditions occur:

- lapse of three months since the last calibration.
- replacement of any major component(s) of the NH_3 analyzer and monitoring system.
- the monitor fails a performance audit.
- a level 1 zero/span NO and NH_3 quality control (QC) check is not within tolerance of the corresponding zero/span gas concentration.

  NOTE: If the monitor fails a precision QC check, the instrument response should be used only as an indicator of the analyzer's performance (no analyzer adjustment can be made based solely on an analyzer's response to a precision gas). A level 1 zero/span QC check must be performed immediately thereafter to determine if the analyzer is within calibration tolerance.

- the analyzer's NH_3 converter efficiency falls below 90 percent.
- physical relocation of the monitor.
- an interruption of more than three days in analyzer operation.
- any other indication such as excessive zero or span drift or malfunction of the NH_3 monitoring system.

4.10.2.B.1 CALIBRATION FREQUENCY

To ensure accurate measurements of the NO and NH_3 concentrations, calibrate the analyzer at the time of installation, and recalibrate it:

1. no later than three months after the most recent calibration or performance

audit which indicated analyzer response to be acceptable; or

2. following any one of the activities listed below:

   a. any repairs which might affect its calibration;

   b. physical location of the analyzer; or

   c. any other indication (including excessive zero/span drift and/or insufficient NH_3 to NO conversion) of possible significant analyzer inaccuracy.

Following any of the activities listed in item 2 above, the zero and span should be checked to determine if a calibration is necessary. If the analyzer zero and span drifts do not exceed the calibration limits in figure 4.10-9 (located at the end of section 4.10.3), a calibration need not be performed. If either the zero or span drift exceeds its respective calibration limit, investigate the cause of the drift, take corrective action, and calibrate the analyzer.

An activity matrix for calibration procedures is presented in figure 4.10-6 at the end of this section.

4.10.2.B.2 CALIBRATION METHOD A

Dynamic Dilution of a High Concentration NO Cylinder Gas to calibrate the NO_x and N_T channel, and NH_3 Permeation Device to establish the correlation of the NH_3 output to the NO calibration.

Assemble a dynamic calibration system (consult the manufacturer's manuals for proper set up and operations). See figure 4.10-2 (at the end of section 4.10.2) for a schematic diagram of a typical calibration system. Ensure that all flow meters are calibrated under conditions of use against an NIST-traceable intermediary primary standard (e.g., soap bubble meter, laminar flow element (LFE), or wet test meter). All volumetric flowrates must be corrected to 298°K (25°C, 78°F) and 760 mm (29.92 in.) Hg. Instruments using water must be corrected for the vapor pressure of water (please refer to the manufacturer's instruction manual).

During the calibration, the analyzer must be operating in its normal sampling mode, and the test atmosphere must pass directly to the sample inlet of the analyzer. Ensure that calibration gases are introduced to the analyzer at atmospheric pressure.

Note: During a calibration, the analyzer's response(s) is set to equal the calibration gas concentration. Any external filters, scrubbers, conditioners, etc., may introduce bias to the measurement system. After completing the calibration,

conduct a level 1 zero/span quality control check and measure the responses. Reconnect all in-line sample conditioning equipment and repeat the same level 1 zero/span quality control check. The differences between the two measured level 1 zero/span checks should be zero. If not, the in-line conditioners are introducing bias to the measurement system.

Precautions must be taken to remove O_2 from the NO pressure regulator and delivery system prior to the start of calibration. Failure to do so can cause significant errors in the calibration. This problem may be minimized by:

1. carefully evacuating the regulator after it has been connected to the cylinder, but before opening the cylinder valve;

2. thoroughly flushing the regulator and delivery system with cylinder gas after opening the cylinder valve; and

3. not removing the regulator from the cylinder between calibrations unless absolutely necessary.

Install the NH_3 permeation device in the constant temperature chamber. Provide a small fixed air flow (200-400 sccm) across the device. The permeation device should always have a continuous air flow across it to prevent large buildup of NH_3 in the system and a consequent restabilization period. Record the flowrate as F_P. Allow the permeation device to stabilize at the calibration temperature for at least 24 hours. The temperature must be adjusted and controlled to within ±0.1°C or less of the calibration temperature as monitored with the temperature measuring device.

Select the operating range of the NH_3 analyzer to be calibrated.

Connect the analyzer recorder and DAS (data acquisition system) outputs to their respective recorder and DAS equipment inputs. All outputs used to calculate and indicate NH_3 analyzer response must be connected to recorder and DAS inputs. All adjustments to the analyzer should be performed based on the appropriate DAS and strip chart recorder readings. References to analyzer responses in the procedures given below refer to DAS and recorder responses.

Prior to calibrating the NH_3 analyzer, the DAS must have all correction factors for any previous calibrations removed. The DAS and strip chart recorder accuracies should also be verified with a power supply and a volt meter of known accuracy. At a minimum, 80 percent, 20 percent, and 0 percent of analyzer full scale responses should be verified. Both chart recorder and DAS readouts should be within ±2 percent full scale of the analyzer output.

Calibration Steps

1. Record the station name and address on a calibration data form/log book. Identify individual stations by their official names and addresses. Where appropriate, a station's name and address should be the same as that appearing on the SAROAD (Storage and Retrieval of Aerometric Data) or AIRS (Aerometric Information Retrieval System) site identification form for that station. This will help to eliminate any confusion by persons not familiar with the station;

2. Identify the person performing the calibration and record the date of calibration;

3. Identify the analyzer being calibrated. The manufacturer's name, model, and serial number should be recorded;

4. Identify the calibration apparatus used. If the calibrator was purchased, record the manufacturer's name, model, and serial number. Calibrators assembled by the user should be assigned an identification number so that calibrations can be referenced to that particular apparatus;

5. Identify, by supplier and cylinder number, the reference standard to be used. Record the concentration of the calibration gas(es). Do not use cylinders with pressures < 200 psig for calibration. Provide a record of NIST traceability for any cylinder used in a calibration. Include the date and name of the person who conducted the referencing;

6. Record the zero and span knob settings after the calibration is complete so that these settings can be used at a later date to determine changes in the instrument performance characteristics;

7. Record the shelter temperature and barometric pressure at the time of calibration;

8. Use calibration data form 4.10-4A for the systematic recording of data determined during calibration. Because zero and calibration adjustments differ between analyzers, the manufacturer's manual should be consulted before calibration is performed;

9. Adjust diluent air flow (zero air) from the calibrator into the analyzer. The zero air flow must exceed the total demand of the analyzer to ensure that no ambient air is pulled into the atmospheric dump. Measure and record the diluent air flow (F_D) on calibration data form 4.10-4A. This air flow should then be corrected to standard conditions (F_{Dstd});

$$F_{Dstd} = F_D(P_a/760)(298/T_a) \qquad \text{Equation 4.10-1}$$

where: P_a = ambient barometric pressure, mmHg

T_a = ambient (room) temperature, °K

F_D = uncorrected dilution flowrate @ T_a and P_a, ccm

NOTE: If a bubble flow meter is used to measure air flow, ensure measured flow is corrected for the vapor pressure of water at ambient temperature. Please consult the manufacturer's SOP for specific instructions.

10. Allow the analyzer to sample zero air until a stable response is obtained (a response that does not vary by more than ±1 percent of full scale over a 5-minute time period); then adjust the analyzer zero control to read zero. For a strip chart recorder, it is recommended to offset the analyzer zero adjustment to +5 percent of the strip chart full scale to facilitate observing negative zero drift. Record the stable zero air response for the N_T, NO_x, and NH_3 channels on calibration data form (figure 4.10-4A);

11. Determine the 80 percent upper range limit (URL) of the analyzer (e.g., for an operating range of 0 to 10 ppm, the 80 percent URL would be 0.8 x 10 = 8.0 ppm);

12. Calculate an estimated 80 percent URL NO cylinder gas flow (F_{NOest}) by solving Equation 4.10-2;

From: $[NO]_{OUT} = [NO]_{std} \times F_{NOest}/(F_{NOest} + F_{Dstd})$

$F_{NOest} = [(F_{Dstd} \times [NO]_{out})/([NO]_{std} - [NO]_{out})$ *Equation 4.10-2*

where: $[NO]_{out}$ = [80 percent URL NO gas concentration

$[NO]_{std}$ = [the NO cylinder gas concentration

F_{NOest} = [the estimated flowrate of the NO cylinder gas, ccm

F_{Dstd} = [diluent air flow @ T_{std} and P_{std}, sccm

13. Adjust the calibration device to deliver an NO cylinder gas flow (F_{NO}) as close to the estimated NO cylinder gas flow (F_{NOest}) as possible. The NO cylinder gas flow will now need to be measured with an accurate flow meter to determine the actual gas flow present (F_{NO}). Correct the actual pollutant gas flowrate (F_{NO}) to standard conditions (F_{NOstd}) using Equation 4.10-3;

$$F_{NOstd} = F_{NO} (P_a/760)(298/T_a)$$ *Equation 4.10-3*

where:

F_{NO} = uncorrected NO cylinder gas flow, ccm @ T_a and P_a

F_{NOstd} =standardized NO flow (@298°K, 760mmHg),sccm

P_a = ambient barometric pressure

T_a = ambient (room) temperature

F_D = diluent air flowrate, ccm

F_{Dstd} = standardized diluent air flow (@ 298°K, 760mmHg), sccm

Record standardized diluent air and pollutant air flows on form (figure 4.10-4A).

Calculate the ppm output, $[NO]_{out}$, by solving Equation 4.10-4.

$$[NO]_{out} = [NO]_{std} \times F_{NOstd}/(F_{NOstd} + F_{Dstd})$$ *Equation 4.10-4*

14. Sample the 80 percent URL NO gas until the NO_x and N_T responses have stabilized. Adjust the span response of the analyzer NO_x and N_T channels for a balanced output equal to the 80 percent calculated ppm test point. The NH_3 output should equal $N_T - NO_x = NH_3$;

    If substantial adjustment of the NO_x and/or N_T span control(s) is necessary, recheck the zero and span adjustments in steps 10 and 14. Record the NO concentration and the analyzer's respective NO_x, N_T and NH_3 responses on calibration data form (figure 4.10-4A);

15. Generate four more evenly spaced NO gas concentrations by decreasing F_{NOstd} (Equation 4.10-3), or increasing F_{Dstd} (Equation 4.10-1). Use equation 4.10-2 to calculate F_{NOest} flows for 60 percent URL, 40 percent URL, 20 percent URL, and 10 percent URL NO gas concentrations. Measure and calculate the actual F_{NO} flows. Correct the F_{NO} flows to standard conditions (Equation 4.10-3). Record the analyzer's N_T, NO_x, and NH_3 responses for each concentration on calibration data form (figure 4.10-4A);

16. Plot the analyzer NO_x and N_T responses against the corresponding NO calculated ppm concentrations. Determine the best straight line by the method of least squares. This can be done with a programmed calculator with this ability, or with the calculation data form presented in figure 4.10-5. Because the time required to perform the calculation manually using the data form is considerably longer than that using a programmed calculator, it is suggested that the latter be used when possible.

Calculate the NO_x and N_T linear regression calibration curves. Record the slope (m), y intercept (b), and correlation coefficient (r) for the corresponding NO_x and N_T curves. To be considered linear, the correlation coefficient for each curve must be ≥ 0.995. The NO_x vs. NO calibration curve should be nearly identical to the N_T vs. NO calibration curve. At a minimum, the slopes of the two curves must agree within ±10%. If not, correct the problem and recalibrate the analyzer;

NOTE: **Once the N_T and NO_x channels are calibrated against NO gas, further adjustments to these channels can be made only against a known NO span gas.**

17. Remove the NO flow from the analyzer and connect the NH_3 permeation device calibration system to the analyzer;

    NOTE: If an NO_2 converter efficiency check is to be done, it will save time if it is performed before the NH_3 calibration.

18. Switch the valve to vent the flow from the permeation device. Adjust the diluent air flowrate (F_{Dstd}) to provide zero air to the analyzer sample inlet. The total air flow must exceed the total demand of the analyzer. Allow the analyzer to sample zero air until a stable response is obtained. Record the stable zero air response for the N_T, NO_x, and NH_3 channels on form (figure 4.10-4A);

19. Switch the valve to provide NH_3 gas to the analyzer sample inlet. Adjust F_{Dstd} to generate an NH_3 concentration of approximately 80 percent URL of the analyzer. The total air flow must exceed the total demand of the analyzer;

20. Calculate the NH_3 concentration using equation 4.10-5 below:

$$[NH_3]_{out} = (P \times Km)/(F_{Pstd} + F_{Dstd}) \qquad \text{Equation 4.10-5}$$

where: $[NH_3]_{out}$ = diluted NH_3 concentration supplied to the analyzer

P = permeation rate, µg/min

Km = molar constant for NH_3

Km = 1.439 (@ 25°C and 760 mmHg)

F_{Pstd} = air flow across permeation device, sccm

F_{Dstd} = diluent air flowrate, sccm

21. Sample this 80 percent URL NH_3 concentration until the analyzer's NH_3 and N_T responses have stabilized. Adjust the NH_3 output to equal N_T - NO_x. Record N_T, NO_x, and NH_3 channels on form 4.10-4B. Recheck zero;

22. With no further adjustments to the NH_3 output, regulate F_{Dstd} to generate four more evenly spaced NH_3 gas concentrations. Use Equation 4.10-5 to calculate F_{Dstd} flows for 60 percent URL, 40 percent URL, 20 percent URL, and 10 percent URL NH_3 gas concentrations. Record the N_T, NO_x, and NH_3 responses for each NH_3 concentration on form (figure 4.10-4A);

23. Plot the analyzer's NH_3 and N_T channel responses against the corresponding NH_3 calibration gas concentrations. Determine the best straight line by the method of least squares. This can be done with a programmed calculator with this ability, or with the calculation data form presented in figure 4.10-5. Because the time required to perform the calculation manually using the data form is considerably longer than that using a programmed calculator, it is suggested that the latter be used when possible.

    Calculate the NH_3 and N_T linear regression calibration curves. Record the slope (m), y intercept (b), and correlation coefficient (r) for the corresponding NH_3, and N_T calibration curves. To be considered linear, the correlation coefficient for each curve must be $\geq$ 0.995. The NH_3 calibration curve should be nearly identical to the N_T calibration curve. If not, correct the problem and recalibrate the analyzer;

24. Calculate the NH_3 to N_T converter efficiency using equation 4.10-6;

NH_3 Converter Efficiency = (slope NH_3 vs. N_T)/(slope NO vs. N_T)X 100 *Equation 4.10-6*

where: slope NH_3 vs. N_T = slope from the linear regression equation of the NH_3 calibration gases versus the corresponding analyzer's N_T channel instrument responses; and

slope NO vs. N_T = slope from the linear regression equation of the NO gases versus the corresponding analyzer's N_T channel instrument responses.

Acceptable operation of the NH_3 converter requires that:

the slope of NH_3 vs. N_T $\geq$ 90 percent and $\leq$110 percent of the slope of NO vs. N_T.

If the N_T slope for NH_3 gases is not within 10 percent of the N_T slope for the NO gases, determine and correct the problem, then recalibrate the analyzer;

25. Report ambient concentrations of NH_3 from uncorrected DAS channel outputs (i.e., N_T - NO_x = NH_3). Any values reported from a strip chart recorder must be similarly derived.

4.10.2.B.3 CALIBRATION METHOD B

Dynamic Dilution of a High Concentration NO Cylinder Gas to calibrate the NO_x and N_T channel and Dynamic Dilution of a High Concentration NH_3 Cylinder Gas to establish the correlation of the NH_3 output to the NO calibration.

Assemble a dynamic calibration system (consult the manufacturer's manuals for proper set up and operations). See figure 4.10-3 (at the end of section 4.10.2) for a schematic diagram of a typical calibration system. Ensure that all flow meters are calibrated under conditions of use against an NIST-traceable intermediary primary standard (e.g., soap bubble meter, laminar flow element (LFE), or wet test meter). All volumetric flowrates must be corrected to 298°K (25°C, 78°F) and 760 mm (29.92 in.) Hg. Instruments using water must be corrected for the vapor pressure of water (please refer to the manufacturer's instruction manual).

During the calibration, the analyzer must be operating in its normal sampling mode, and the test atmosphere must pass directly to the sample inlet of the analyzer. Ensure that calibration gases are introduced to the analyzer at atmospheric pressure.

Note: During a calibration, the analyzer's response(s) is set to equal the calibration gas concentration. Any external filters, scrubbers, conditioners, etc., may introduce bias to the measurement system. After completing the calibration, conduct a level 1 zero/span quality control check and measure the responses. Reconnect all in-line sample conditioning equipment and repeat the same level 1 zero/span quality control check. The differences between the two measured level 1 zero/span checks should be zero. If not, the in-line conditioners are introducing bias to the measurement system.

Precautions must be taken to remove O_2 from the NO and NH_3 pressure regulators and delivery system prior to the start of calibration. Failure to do so can cause significant errors in calibration. This problem may be minimized by:

1. carefully evacuating the regulator after it has been connected to the cylinder, but before opening the cylinder valve;

2. thoroughly flushing the regulator and delivery system with cylinder gas after opening the cylinder valve; and

3. not removing the regulator from the cylinder between calibrations unless absolutely necessary.

Select the operating range of the NH_3 analyzer to be calibrated. Both the NO_x and N_T channels must be set to the same range.

Connect the recorder and DAS outputs of the analyzer to the inputs of the strip chart recorder and DAS. All outputs used to calculate and indicate NH_3 analyzer response must be connected to recorder and DAS inputs. All adjustments to the analyzer should be performed based on the appropriate DAS and strip chart recorder readings. References to analyzer responses in the procedures given below refer to DAS and recorder responses.

Prior to calibrating the NH_3 analyzer, the DAS must have all correction factors for any previous calculation regressions removed. The DAS and strip chart recorder accuracies should be verified with a power supply and a volt meter of known accuracy. At a minimum, 80 percent, 20 percent, and 0 percent of analyzer full-scale responses should be verified. Both chart recorder and DAS readouts should be within ±2 percent full-scale volts of the analyzer output.

Calibration Steps

Calibration steps 1 through 16 are identical to those described in Calibration Method A, except use form 4.10-4B for the systematic recording of data.

17. Adjust diluent air flow (zero air) from the calibrator to the analyzer (as in step 9, method A). Allow the analyzer to sample zero air until a stable response is obtained. Record the stable zero air response for the NH_3, N_T, and, NO_x channels on form 4.10-4B;

18. Calculate the estimated 80 percent URL NH_3 cylinder gas flow (F_{NH3est}) by solving equation 4.10-7;

From: $[NH_3]_{out} = [NH_3]_{std} \times F_{NH3est}/(F_{NH3est} + F_{Dstd})$

$F_{NH3est} = (F_{Dstd} \times [NH_3]_{out})/([NH_3]_{std} - [NH_3]_{out})$ *Equation 4.10-7*

$F_{NOstd} = F_{NO}\ (P_a/760)(298/T_a)$ *Equation 4.10-3*

where: F_{NH3est} = uncorrected NH_3 cylinder gas flow, ccm @ T_a and P_a

P_a = ambient barometric pressure, mmHg

T_a = ambient (room) temperature, °K (273 + °C)

F_{Dstd} = standardized diluent air flow (@298°K, 760mmHg), sccm

$[NH_3]_{out}$ = 80 percent URL NH_3 gas concentration

$[NH_3]_{std}$ = NH_3 cylinder gas concentration

19. Once the estimated NH_3 cylinder gas flow has been calculated, the calibration device must be adjusted to a setting as close to the estimated flow as possible. The NH_3 cylinder gas flow will now need to be measured with an accurate flow meter to determine the actual gas flow present (F_{NH3}). Once the actual pollutant gas flowrate (F_{NH3}) is established, it must be corrected to standard conditions (F_{NH3std}) by solving equation 4.10.8;

$$F_{NH3std} = F_{NH3}(P_a/760)(298/T_a) \qquad \text{Equation 4.10-8}$$

where: F_{NH3} = uncorrected NH_3 cylinder gas flow

P_a = ambient barometric pressure

T_a = ambient (room) temperature

Record the actual and standardized flows on form 4.10-4B;

20. Calculate the ppm output of the calibration device by solving equation 4.10-9;

$$[NH_3]_{out} = ([NH_3]_{std})(F_{NH3std})/(F_{NH3std} + F_{Dstd}) \qquad \text{Equation 4.10-9}$$

21. Sample the 80 percent URL NH_3 gas until the NH_3 and N_T responses have stabilized. Adjust the NH_3 analyzer's output to equal N_T - NO_x and allow the analyzer to achieve a steady reading. Record the NH_3 concentration and the analyzer's respective N_T, NO_x, and NH_3 responses on form 4.10-4B. Recheck zero;

22. With no further adjustments to the NH_3 output, generate four more evenly spaced NH_3 gas concentrations by decreasing F_{NH3std} or increasing F_{Dstd}. Calculate the F_{NH3} flows for 60 percent URL, 40 percent URL, 20 percent URL, and 10 percent URL NH_3 gas concentrations. Measure the F_{NH3std} flows, correct flows to standard conditions (use Equation 4.10-8), and calculate the ppm concentrations. Record the analyzer's respective N_T, NO_x, and NH_3 responses on form 4.10-4B;

23. Plot the analyzer's NH_3 and N_T channel responses against the corresponding NH_3 calibration gas concentrations. Calculate the NH_3 and N_T linear regression calibration curves. Record the slope (m), y intercept (b), and correlation coefficient (r) for each calibration curve on form 4.10-4B. The correlation coefficient for each must be $\geq$ 0.995 and the slopes should be nearly identical. If not, correct the problem and recalibrate the analyzer;

24. Calculate the NH_3 to N_T converter efficiency using equation 4.10-6 and record on form 4.10-4B;

NH_3 Converter Efficiency = (slope NH_3 vs. N_T)/(slope NO vs. N_T) X 100 *Equation 4.10-6*

where: slope NH_3 vs. N_T = slope from the linear regression equation of the NH_3 calibration gases versus the corresponding analyzer's N_T channel instrument responses; and

slope NO vs. N_T = slope from the linear regression equation of the NO gases versus the corresponding analyzer's N_T channel instrument responses.

Acceptable operation of the NH_3 converter requires that:

the slope of NH_3 vs. $N_T \geq 90$ percent and ≤ 110 percent of the slope of NO vs. N_T.

If the N_T slope for NH_3 gases is not within 10 percent of the N_T slope for the NO gases, determine and correct the problem, then recalibrate the analyzer;

25. Report ambient concentrations of NH_3 from uncorrected DAS channel outputs (i.e., N_T - NO_x = NH_3). Any values reported from a strip chart recorder must be similarly derived.

4.10.2.B.4 NO_2 CONVERTER EFFICIENCY CHECKS

After completion of the calibration of the NO_x and N_T channels, the two converters must be checked for efficiency in converting NO_2 to NO. Two methods are available to determine NO_2 converter efficiency. These are:

1) **Dynamic dilution of an NO_2 permeation tube to generate known quantities of NO_2 calibration gas**; and

2) **Gas Phase Titration (GPT) of an NO standard with O_3 to generate NO_2.**

To ensure reliable NO_2 converter operation, perform an NO_2 converter efficiency test:

1. at the time of installation;

2. every 6 months thereafter;

3. whenever the analyzer fails an audit; and

   following any one of the activities listed below:

   a. any repairs which might affect its calibration;

   b. physical relocation of the analyzer; or

   c. any other indication (including excessive level one zero/span drift and/or insufficient NO_2 to NO conversion) of possible significant analyzer inaccuracy.

Three NO_2 calibration points and a zero point are required. The recommended NO_2 concentrations are 80, 60, 40, and 20 percent of the analyzer full-scale output.

If an NH_3 analyzer is to be operated at a range higher than 2 ppm, generating NO_2 quantities above the 2 ppm range can present problems. There are limiting factors to both methods:

1. With the permeation device method, generally more than one permeation tube is necessary to generate NO_2 concentrations above 2 ppm. Each permeation device's certification lists an uncertainty in the accuracy of the NO_2 analysis. Using more than one permeation device increases the uncertainty of the NO_2 calibration gas.

2. Generating NO_2 concentrations above 2 ppm with the GPT method requires O_3 generating capabilities above what is routinely available from GPT calibrators. If the proper calibration equipment for producing higher levels of NO_2 is not available, three evenly spaced points below the 2 ppm level (but above the method quantification limit, MQL) are acceptable. If this method is used, be sure to note the reason on the calibration form.

Once the method of NO_2 gas generation is chosen, prepare the analyzer for the converter efficiency checks. To determine the amount of NO_2 that is present, pass the NO_2 calibration gas through the reaction cell without passing through the converter and record the analyzer's responses. This is followed by changing the path so the same calibration gas passes through the selected converter and again recording the analyzer's responses. The difference between the two readings equals NO_2.

Note: If the chemiluminescent NH_3 analyzer is a modification of an Environmental Protection Agency (EPA) Reference or Equivalent method NO_2 analyzer, the NH_3 analyzer may not report valid NO_2 data unless the modified NO_2 (i.e., NH_3) analyzer subsequently received EPA reference or equivalent NO_2 method certification.

In order to perform NO_2 converter efficiency tests, a converter bypass tube may need to be installed for both of the analyzer's converters.

For total oxides of nitrogen (N_T) analyzers operating above 1.0 ppm full scale range, it is acceptable to determine the analyzer's NO_2 converter's ability to transform NO_2 to NO and show the N_T converter's ability to convert NO_2 to NO by comparison. This is done by recording the N_T's output at the same time the NO_2 converter is being tested. As the NO_2 converter is being tested, it will measure the presence of NO_2 in the test gas. It will also measure the sum of NO and NO_2 (NO_x) present in the test gas. At the same time, the N_T converter should measure a similar response. Assuming the NO_2 converter is operating acceptably ($\geq$ 96% converter efficiency), the measured values from both converters should be in close agreement.

The following procedures (method 1 and method 2) reflect an analyzer that is operating in the 0 to 0.5ppm or 0 to 1.0 ppm full scale range. If an analyzer will be operated outside this range and both NO_2 and N_T converters will be checked for NO_2 converter efficiencies, then, the procedure must be formally submitted in writing to the ADEC Quality Assurance Office for review and written approval before being implemented.

Forms are provided at the end of this section which are intended to provide a template for conducting an NO_2 converter efficiency check (see figures 4.10-4C and 4.10-4D).

4.10.2.B.4.a Dynamic dilution of an NO_2 permeation device to generate known quantities of NO_2 calibration gas for testing NO_2 converter efficiency.

The permeation device method of generating known quantities of NO_2 gas to check the analyzer's NO_2 converter efficiency follows:

1. Acquire a permeation device to generate sufficient NO_2 gas to test the analyzer's NO_2 converter efficiency;

2. Allow the permeation device to equilibrate for 24 hours. It is important to check the permeation oven, with a suitable temperature measuring device, to ensure it maintains the desired oven temperature ±0.1°C;

3. Switch the valve to vent the flow from the permeation device. Adjust the diluent air flowrate (F_{Dstd}) to provide zero air to the analyzer's sample inlet. The total air flow must exceed the total demand of the analyzer. Allow the analyzer to sample zero air until a stable response is obtained. Record the stable zero air response for the N_T, NO_x, and NH_3 channels on form 4.10-4C;

   Note: No adjustment to the NO or No_x channels may be made at this time.

4. Switch the valve to provide NO_2 gas to the analyzer's sample inlet. Adjust F_{Dstd} to generate an NO_2 concentration approximately 80 percent URL of the analyzer. The total air flow must exceed the total demand of the analyzer;

5. Calculate the NO_2 concentration using equation 4.10-10 below:

$$[NO_2]_{out} = (P \times Km)/F_{Pstd} + F_{Dstd}) \qquad \text{Equation 4.10-10}$$

where: $[NO_2]_{out}$ = diluted NO_2 concentration supplied to the analyzer

P = permeation rate, µg/min

Km = molar constant for NO_2

= 0.532 (@ 25°C and 760 mmHg)

F_{Pstd} = air flow across permeation device corrected to standard conditions (i.e., 298°K (25°C) and 760 mmHg), sccm

F_{Dstd} = diluent air flowrate corrected to standard conditions, sccm

6. Sample this 80 percent (%) URL NO_2 concentration until the analyzer's No_x and N_T responses have stabilized. Record N_T, NO_x, NO_2, NH_3, and NO channels on form 4.10-4C;

7. Adjust F_{Dstd} to generate four more evenly spaced NO_2 gas concentrations. Calculate F_{Dstd} flows to generate 60%, 40%, 20%, and 10% URL NO_2 gas concentrations. Measure the F_{Dstd} flows and calculate the ppm concentrations. Record the N_T, NO_x, NO_2, NO, and NH_3 responses for each concentration on form 4.10-4C;

8. For each converter, use a linear regression calibration curve, plot the analyzer's NO_2 (from N_T and NO_x channels) responses against the corresponding NO_2 calibration concentrations. Using equations 4.10-11 and 4.10-12, calculate the average converter efficiency for each respective converter. Record the respective slope (m), y intercept (b), correlation coefficient (r), and average converter efficiency on form 4.10-4C. If the average converter efficiency, for each converter, < 96 percent, either replace or service the converter and repeat the calibration.

$$\%\ NO_2 \text{ converter efficiency for } NO_2 \text{ converter} = \text{slope } [NO_2]_{out} \text{ vs } [NO_2]_{conv} \times 100 \qquad \text{Equation 4.10-11}$$

$$\%\ NO_2 \text{ converter efficiency for } N_T \text{ converter} = \text{slope } [NO_2]_{out} \text{ vs } [NO_2] \times 100 \qquad \text{Equation 4.10-12}$$

where: $[NO_2]_{out}$ = diluted NO_2 concentration supplied to the analyzer

$[NO_2]_{conv.}$ = NO_2 concentration measured thru N_T or NO_2 converter

4.10.2.B.4.b Gas Phase Titration (GPT) of an NO standard with O_3 to generate NO_2.

The GPT method of generating known quantities of NO_2 gas to check the analyzer's NO_2 converter efficiency follows:

1. Connect all bypass lines for the N_T and NO_2 converters;

2. Generate an NO concentration near 90 percent of the analyzer full scale. Use equation 4.10-2 to calculate an estimated NO and diluent air flowrate to generate a 90% URL NO concentration gas.

Note: Ensure the GPT dynamic parameter specifications are met prior to generating NO_2 GPT concentrations (see *Nitrogen Dioxide (NO_2) by Chemiluminescence, method 4.7 subsection 2.B.2.a* (of this manual) for GPT calibration check procedure).

Sample this NO concentration, with the selected converter configured in the bypass mode, until a stable analyzer response is established. Record the related indicator response on the converter efficiency data form (Figure 4.10-4D), N_T or NO_2, depending on which converter is being checked) under $[NO]_{orig}$;

3. Without any other adjustments, switch the air flow to run through the selected converter. Allow the analyzer response to stabilize. Record the related indicator response on the converter efficiency data form (figure 4.10-4D) under 90% NO. These two outputs should essentially be the same reading. If not, check for an analyzer leak;

4. Return the converter to the bypass mode. Adjust the O_3 generator to produce sufficient O_3 to decrease the NO concentration from 90% to approximately 10% of full scale (this will be equivalent to an 80% NO_2 full-scale output). Record the indicator output for the related converter on the converter efficiency data form (figure 4.10-4D) under 10% NO calibration point;

5. Without any other adjustments, return the converter to the non-bypassed mode. Allow the analyzer to reach a stable reading. Record the output reading on the converter efficiency data form (figure 4.10-4D) under the 80% NO_2 point;

6. Return the analyzer to the bypass mode. Adjust the O_3 generator to produce sufficient O_3 to increase the NO concentration from 10% to approximately 50% of full scale (this will be equivalent to a 40% NO_2 full-scale output). Record the indicator output on the converter efficiency data form (figure 4.10-4D) under 50% NO point;

7. Without any other adjustments, return the converter to the non-bypassed mode. Allow the analyzer to reach a stable reading. Record the related indicated output reading on the converter efficiency data form (figure 4.10-4C) under the 40% NO_2 point;

8. Repeat step 5, except adjust the O_3 for a 70% NO output;

9. Repeat step 6 for the 20% NO_2 point;

Note: To calculate the NO_2 converter efficiency for measurements performed through the NO_2 converter, follow items 10 and 11.

10. Using the data found on the converter efficiency data form (figure 4.10-4C), calculate $[NO_2]_{out}$ and $[NO_2]_{conv}$ using equations 4.10-13 and 4.10-14;

$[NO_2]_{out}$ thru NO_2 converter = $[NO]_{orig}$ - X% $[No_x]$Bypass *Equation 4.10-13*

$[NO_2]_{conv\ thru}$ NO_2 converter = $[NO_2]_{out}$ - (90% [NO] - X% $[No_x]$No Bypass) *Equation 4.10-14*

11. For the NO_2 converter, use a linear regression calibration curve and plot the analyzer's NO_2 (from N_T and NO_x channels) responses against the corresponding NO_2 calibration concentrations. Using equation 4.10-12, calculate the average converter efficiency. Record the slope (m), y intercept (b), correlation coefficient (r), and average converter efficiency on form 4.10-4D. If the average converter efficiency < 96 percent, either replace or service the converter and repeat the calibration.

Note: To calculate the NO_2 converter efficiency for measurements performed through the N_T converter, follow items 12 and 13.

12. Using the data found on the converter efficiency data form (figure 4.10-4C), calculate $[NO_2]_{out}$ and $[NO_2]_{conv}$ using equations 4.10-15 and 4.10-16;

$[NO_2]_{out}$thru N_T converter = $[NO]_{orig}$ - X% $[N_T]$Bypass *Equation 4.10-15*

$[NO_2]_{conv}$thru $N_T$converter = $[NO_2]_{out}$-(90%[NO]-X%$[N_T]$No Bypass) *Equation 4.10-16*

13. For the N_T converter, use a linear regression calibration curve and plot the analyzer's NO_2 (from N_T and NO_x channels) responses against the corresponding NO_2 calibration concentrations. Using equation 4.10-12, calculate the average converter efficiency. Record the slope (m), y intercept (b), correlation coefficient (r), and average converter efficiency on form 4.10-4D. If the average converter efficiency < 96 percent, either replace or service the converter and repeat the calibration.

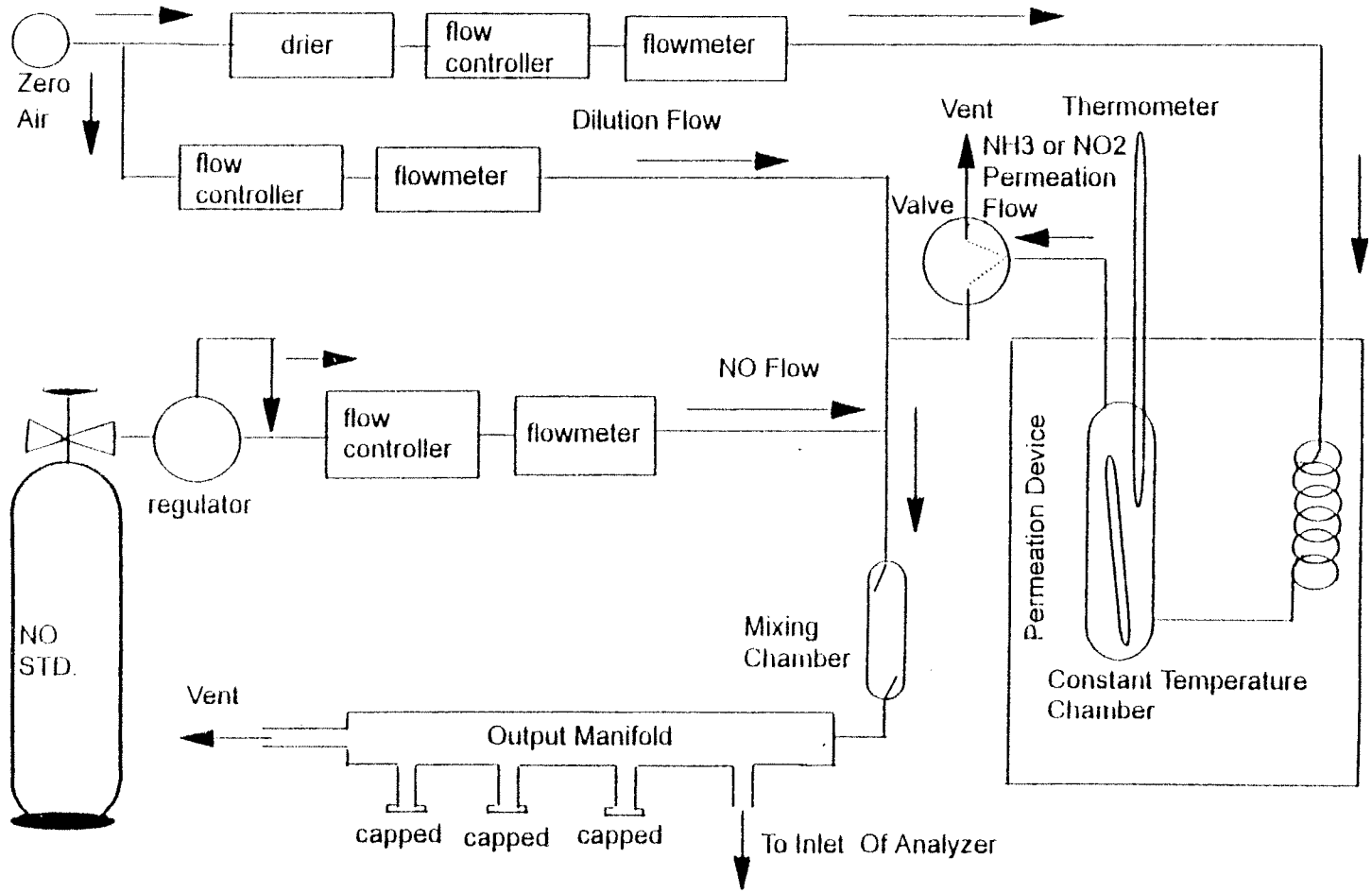

Schematic diagram of a typical NO gas dilution and NH3 permeation device calibration system

Figure 4.10-2

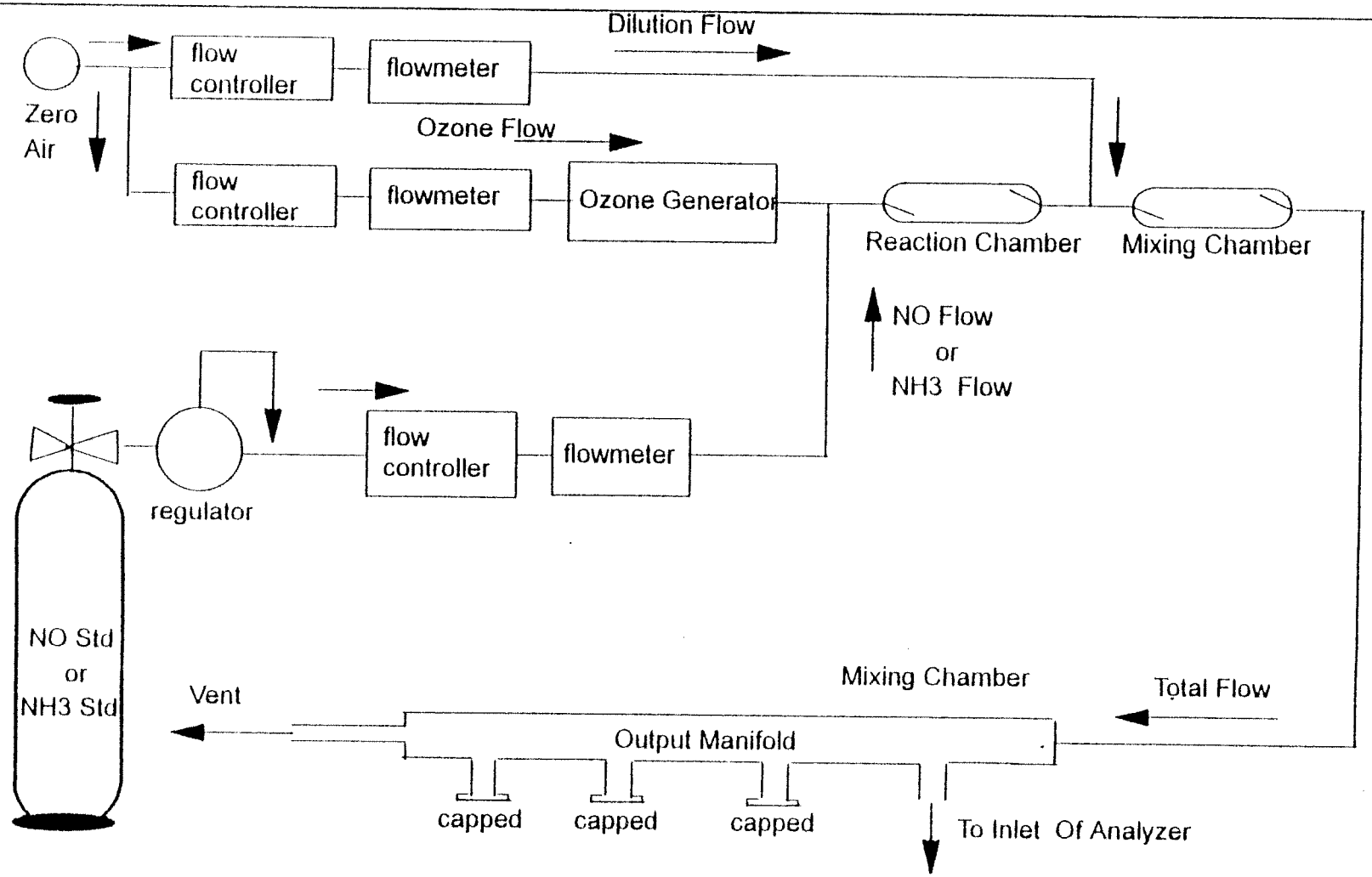

Schematic diagram of a typical NH3 GPT calibration system

Figure 4.10-3

NH_3 Calibration Data Form by NO Gas Dilution & NH_3 Permeation Device Dilution (Method A)

1. Station Identification _____

2. Operating Agency _____

3. Calibrated by _____ 4. Date _____

5. NO_x Analyzer Mfr _____ 6. Thermal Oxidizer Mfr _____

   Model _____ Model _____

   S/N _____ S/N _____

7. GPT Calibrator Mfr _____ 8. Permeation Calibrator Mfr _____

   Model _____ Model _____

   S/N _____ S/N _____

9. Zero Air Source Mfr _____ 10. Primary Flow Calibrator Mfr _____

   Model _____ Model _____

   S/N _____ S/N _____

11. NO Reference Std. Supplier _____ 12. NH_3 Reference Std. Supplier _____

   Cyl #_____ Certification Date _____ Cyl #_____ Certification Date _____

   $[NO]_{Std}$ =_____ ppm, $[NO_2]_{IMPURITY}$ =_____ ppm $[NH_3]_{Std}$ = _____ng/min @ 35oC

   Reference to NTRM_____ by_____ Reference to NTRM_____ by _____

11. Analyzer Range _____

12. NO_x Analyzer Settings: 13. Thermal Oxidizer Settings:

   Vacuum Gauge _____ Time Constant _____ Temperature _____ Time Constant _____

CHANNEL	ZERO POT.	SPAN POT.
N_T		
NO_X		
NO		
NH_3		
NO_2		

Figure 4.10-4A.1

NH_3 Calibration Data Form by NO Gas Dilution & NH_3 Permeation Device Dilution (Method A)

NO Calibration Gas Data								Instrument Response		
Calibration Points	Ta (oC)	Pa (mmHg)	Dilution Gas Flow		NO Gas Flow		$[NO]_{out}$ (ppm) (x)	[NO] DAS(y) (ppm)	$[NO_X]$ DAS(y) (ppm)	$[N_T]$ DAS(y) (ppm)
			F_D (ccm)	F_{Dstd} (sccm)	F_{NO} (ccm)	F_{NOstd} (sccm)				
Zero										
80% URL										
60% URL										
40% URL										
20% URL										
10% URL										

NO Linear Regression Calibration Data					
X	VERSUS	Y	Slope	y Intercept	Correlation Coefficient
NO		NO			
NO		NO_X			
NO		N_T			

NH_3 Calibration Permeation Device Data							Instrument Response		
Calibration Points	Ta (oC)	Pa (mmHg)	Dilution Gas Flow		Permeation Flow	$[NH_3]_{out}$ (ppm) (x)	$[NH_3]$ DAS(y) (ppm)	$[NO_X]$ DAS(y) (ppm)	$[N_T]$ DAS(y) (ppm)
			F_D (ccm)	F_{Dstd} (sccm)	F_{Dstd} (sccm)				
Zero									
80% URL									
60% URL									
40% URL									
20% URL									
10% URL									

NO Linear Regression Calibration Data					
X	VERSUS	Y	Slope	y Intercept	Correlation Coefficient
NH_3		NH_3			
NH_3		N_T			

Figure 4.10-4A.2

Calculations of NH_3 Converter Efficiency

Slope NH_3 gas vs. N_T channel = _____

Slope NO gas vs. N_T channel = _____

NH_3 Converter Efficiency = (Slope NH_3 vs. N_T)/(NO vs. N_T) x 100 = _____

Slope NH_3 vs. $NH_T \geq 90\%$ and $\leq 110\%$ Slope NO vs. N_T

Figure 4.10-4A.2 (continued)

Equations Used for NO/NH_3 Calibration by NO Cylinder Gas Dilution and NH_3 Permeation Device Dilution (Method A)

Equation 4.10-1 $F_{Dstd} = (F_D)(Pa/760mmHg)(298°K/Ta)$

Equation 4.10-2 $F_{NOest} = (F_{Dstd} \times [NO]_{out})/([NO]_{std} - [NO]_{out})$

Equation 4.10-3 $F_{NOstd} = F_{NO}\ (Pa/760mmHg)(298°K/Ta)$

Equation 4.10-4 $[NO]_{out} = ([NO]_{std} \times F_{NOstd})/(F_{NOstd} + F_{Dstd})$

Equation 4.10-5 $[NH_3]_{out} = (P \times Km)/(F_{Pstd} + F_{Dstd})$

Equation 4.10-6 NH_3 Converter Efficiency = (Slope NH_3 vs. N_T)/(Slope NO vs. N_T) x 100

where:

Pa = ambient barometric pressure, mmHg.
Ta = ambient gas temperature, °K (273 + °C)
F_D = ambient dilution air flow, ccm
F_{Dstd} = standard dilution air flow, sccm @ 298°K, 760mmHg.
F_{NOest} = estimated NO cylinder gas flow to calculate specific NO calibration gas concentration
F_{NO} = ambient NO cylinder gas flow, ccm
F_{NOstd} = standard NO cylinder gas flow, sccm @ 298°K, 760mmHg.
$[NO]_{std}$ = NO cylinder gas concentration
$[NO]_{out}$ = NO calibration gas concentration
P = permeation device flowrate, ng/min @ known °C
km = molar constant, for NH_3 km = 1.439 @ 30°C
F_{Pstd} = air flow across permeation device, sccm
URL = analyzer upper Range Limit

Figure 4.10-4A.3

NH_3 Calibration Data Form by NO Gas Dilution & NH_3 Gas Dilution (Method B)

1. Station Location _____

_____

2. Operating Agency _____

3. Calibrated by _____ 4. Date _____

5. NO_x Analyzer Mfr _____ 6. Thermal Oxidizer Mfr _____

Model _____ Model _____

S/N _____ S/N _____

7. GPT Calibrator Mfr _____ 8. Zero Air Source Mfr _____

Model _____ Model _____

S/N _____ S/N _____

9. NO Reference Std Supplier _____

_____

Cyl #_____ Certification Date _____

$[NO]_{Std}$ =_____ ppm, $[NO_2]_{IMPURITY}$ = _____ ppm

Reference to NTRM _____

10. NH_3 Reference Std Supplier _____

_____

Cyl #_____ Certification Date_____

$[NH_3]_{Std}$ = _____ ppm

Reference to NTRM _____

11. Analyzer Range _____

12. NO_x Analyzer Settings:

Vacuum Gauge _____ Time Constant _____

13. Thermal Oxidizer Settings:

Temperature _____ Time Constant _____

CHANNEL	ZERO POT.	SPAN POT.
N_T		
NO_x		
NO		
NH_3		
NO_2		

Figure 4.10-4B.1

NH_3 Calibration Data Form by NO Gas Dilution & NH_3 Gas Dilution (Method B)

NO Calibration Gas Data								Instrument Response		
Calibration Points	Ta (oC)	Pa (mmHg)	Dilution Gas Flow		NO Gas Flow		$[NO]_{out}$ (ppm) X	[NO] DAS, (ppm)	$[NO_X]$ DAS, (ppm)	$[N_T]$ DAS, (ppm)
			F_D (ccm)	F_{Std} (sccm)	F_{NO} (ccm)	F_{NOStd} (sccm)				
Zero										
80%										
60%										
40%										
20%										
10%										

NO Linear Regression Calibration Data					
X	VERSUS	Y	Slope	y Intercept	Correlation Coefficient

NH_3 Calibration Gas Dilution Data								Instrument Response		
Calibration Points	Ta (oC)	Pa (mmHg)	Dilution Gas Flow		NH_3 Gas Flow		$[NH_3]_{out}$ (ppm) X	$[NH_3]$ DAS, Y (Ppm)	$[NO_X]$ DAS, Y (ppm)	$[N_T]$ DAS, Y (ppm)
			F_D (ccm)	F_{Dstd} (sccm)	F_{NH3} (ccm)	F_{NH3Std} (sccm)				
Zero										
80%										
60%										
40%										
20%										
10%										

NO Linear Regression Calibration Data					
X	VERSUS	Y	Slope	y Intercept	Correlation Coefficient

Figure 4.10-4B.2

Calculation of NH_3 Converter Efficiency

Slope NH_3 gas vs. N_T channel = _____

Slope NO gas vs. N_T channel = _____

NH_3 Converter Efficiency = (slope NH_3 vs N_T)/(slope NO vs N_T) x 100 = _____ %

Slope NH_3 vs N_T $\geq$ 90% and $\leq$ 110% slope NO vs N_T

Figure 4.10-4B.2 (continued)

Equations Used for NO/NH_3 Calibration by NO and NH_3 Cylinder Gas Dilution (Calibration Method B)

Equation 4.10-1 $F_{Dstd} = (F_D)\ (Pa/760\ mmHg)\ (298°K/Ta)$

Equation 4.10-2 $F_{NOest} = (F_{DStd} \times [NO]_{OUT})/([NO]_{Std} - [NO]_{OUT})$

Equation 4.10-3 $F_{NOstd} = (F_{NO})\ (Pa/760\ mmHg)\ (298°K/Ta)$

Equation 4.10-4 $[NO]_{OUT} = ([NO]_{Std} \times F_{NOStd})/(F_{NOStd} + F_{DStd})$

Equation 4.10-6 NH_3 Converter Efficiency = (slope NH_3 vs N_T)/(slope NO vs N_T) x 100

Equation 4.10-7 $F_{NH3out} = (F_{Dstd} \times [NH_3]_{OUT})/([NH_3]std - [NH_3]_{OUT})$

Equation 4.10-8 $F_{NH3std} = F_{NH3}\ (Pa/760\ mmHg)\ (298°K/Ta)$

Equation 4.10-9 $[NH_3]_{OUT} = ([NH_3]_{std} \times F_{NH3std})/(F_{Dstd} + F_{NH3std})$

where:

Pa = ambient barometric pressure, mmHg

Ta = ambient gas temperature, °K (273 + °C)

F_D = ambient dilution air flow, ccm

F_{Dstd} = standard dilution air flow, sccm @ 298 °K, 760 mmHg

F_{NOest} = estimated NO cylinder gas flow to calculate specific NO gas concentrations$_3$

F_{NO} = ambient NO cylinder gas flow, ccm

F_{NOstd} = standard NO cylinder gas flow, sccm @ 298 °K, 760 mmHg

$[NO]_{std}$ = NO cylinder gas concentration

$[NO]_{OUT}$ = NO calibration gas concentration

URL = Analyzer upper range limit

F_{NH3est} = estimated NH_3 cylinder gas flow to calculate specific NH_3 gas concentrations

F_{NH3} = ambient NH_3 cylinder gas flow, ccm

F_{NH3std} = standard NH_3 cylinder gas flow, sccm @ 298°K, 760 mmHg

$[NH_3]_{std}$ = NH_3 cylinder gas concentration

$[NH_3]_{OUT}$ = NH_3 calibration gas concentration

Figure 4.10-4B.3

Converter Efficiency Check Data Form by NO_2 Permeation Device Dilution (Method 1)

1. Station Identification _____

_____

2. Operating Agency _____

3. Test Performed by _____ 4. Date _____

5. NO_x Analyzer Mfr _____ 6. Thermal Oxidizer Mfr _____

Model _____ Model _____

S/N _____ S/N _____

7. Zero Air Source Mfr _____ 8. Primary Flow Calibrator Mfr _____

Model _____ Model _____

S/N _____ S/N _____

9. Permeation Calibrator Mfr _____ 10. NO_2 Reference Std Supplier _____

_____ _____

Model _____ Permeation Device #_____

S/N _____ Certification Date _____

11. Analyzer Range _____ Reference to NTRM _____ by_____

12. NO_x Analyzer Settings 13. Thermal Oxidizer Settings

Vacuum Gauge _____ Time Constant _____ Temperature _____ Time Constant _____

CHANNEL	ZERO POT.	SPAN POT.
N_T		
NO_x		
NO		
NH_3		
NO_2		

Figure 4.10-4C.1

Converter Efficiency Check Data Form
by NO_2 Permeation Device

N_T Converter										
NO_2 Permeation Device Test Data							Instrument Response			
NO_2 Calibration Points	Ta (°C)	Pa (mmHg)	Dilution Gas Flow		Perm. Gas Flow F_{Pstd} (sccm)	$[NO_2]$ out (x) (ppm)	$[NO_2]$ conv (y) (ppm)	NO (ppm)	NO_x (ppm)	N_T (ppm)
			F_D (ccm)	F_{Dstd} (sccm)						
Zero										
80% URL										
60% URL										
40% URL										
20% URL										
10% URL										

NO_2 Converter										
NO_2 Permeation Device Test Data							Instrument Response			
NO_2 Calibration Points	Ta (°C)	Pa (mmHg)	Dilution Gas Flow		Perm. Gas Flow F_{Pstd} (sccm)	$[NO_2]$ out (x) (ppm)	$[NO_2]$ conv (y) (ppm)	NO (ppm)	NO_x (ppm)	N_T (ppm)
			F_D (ccm)	F_{Dstd} (sccm)						
Zero										
80% URL										
60% URL										
40% URL										
20% URL										
10% URL										

<u>N_T Converter Linear Regression Analysis</u>: $[NO_2]_{out} = X$, $(N_T - NO_X) = y$

slope = _____, y intercept = _____, Correlation Coefficient = _____

NO_2 Converter Efficiency for N_T Converter = slope $[NO_2]_{out}$ vs $(N_T - NO_X)$x 100 =_____ %

<u>NO_2 Converter Linear Regression Analysis</u>: $[NO_2]_{out} = X$, $(N_T - NO_X) = y$

slope = _____, y intercept = _____, Correlation Coefficient = _____

NO_2 Converter Efficiency for NO_2 Converter = slope $[NO_2]_{out}$ vs $(N_T - NO_X)$ x 100 =_____ %

Figure 4.10-4C.2

Equations Used for NO_2 Converter Efficiency Test by NO_2 Permeation Device Dilution (Method 1)

Equation 4.10-1 $F_{Dstd} = (F_D)\ (Pa/760mmHg)\ (298\ ^{\circ}K/Ta)$

Equation 4.10-10 $[NO_2]_{out} = (P \times Km)/(F_{Pstd} + F_{Dstd})$

Equation 4.10-11 NO_2 Converter Efficiency for N_T Converter =

slope $[NO_2]_{out}$ vs $[N_T - NO_X] \times 100$

Equation 4.10-12 NO_2 Converter Efficiency for NO_2 Converter =

slope $[NO_2]_{out}$ vs $[N_T - NO_X] \times 100$

where:

Pa = ambient barometric pressure, mmHg

Ta = ambient gas temperature, °K (273 + °C)

F_D = ambient diluent air flow, ccm

F_{Dstd} = standard diluent air flow, sccm @ 298 °K, 760 mmHg

F_{Pstd} = air flow across permeation device, sccm

P = permeation device flowrate, ug/min @ known °C

Km = molar constant, for NO_2 Km = 0.532 ug/min @ 30 °C

URL = analyzer upper range limit

$[NO_2]_{out}$ = NO_2 calibration gas concentration

$[NO_2]_{conv}$ = NO_2 concentration as measured by the analyzer after passing through the NO_2 converter

$[N_T - NO_X]$ = NO_2 concentration as measured by analyzer after passing through the N_T converter

Figure 4.10-4C.3

Converter Efficiency Check Data Form by NO_2 GPT
(Method 2)

1. Station Identification _____

_____

2. Operating Agency _____

3. Test Performed by _____ 4. Date _____

5. NO_x Analyzer Mfr _____ 6. Thermal Oxidizer Mfr _____

Model _____ Model _____

S/N _____ S/N _____

7. Zero Air Source Mfr _____ 8. Primary Flow Calibrator Mfr _____

Model _____ Model _____

S/N _____ S/N _____

9. GPT Calibrator Mfr _____ 10. NO Reference Std Supplier _____

Model _____ Cyl #_____ Certification Date _____

S/N _____ $[NO]_{std}$ = _____ppm, $[NO_2]_{IMPURITY}$ = _____ppm

11. Analyzer Range _____ Reference to NTRM _____

12. NO_x Analyzer Settings: 13. Thermal Oxidizer Settings:

Vacuum Gauge _____ Time Constant _____ Temperature _____ Time Constant _____

CHANNEL	ZERO POT.	SPAN POT.
N_T		
NO_x		
NO		
NH_3		
NO_2		

Figure 4.10-4D.1

Converter Efficiency Check Data Form by NO_2 GPT (Method 2)

N_T Converter

NO_2 GPT Calibrator Test Gas Data									Analyzer Response					
NO_2 Calibration Points	O_3	Ta (°C)	Pa (mmHg)	Dilution Flow		NO Flow		[NO] OUT (ppm)	Bypass [NO] ORIG	No Bypass $[N_T]$ (ppm)	Bypass $[N_T]$ (ppm)	$[NO_2]$ impurity (ppm)	X $[NO_2]$ OUT (ppm)	Y $[NO_2]$ CONV (ppm)
				F_D (sccm)	F_{Dest} (sccm)	F_{NO} (sccm)	F_{NOest} (sccm)							
90% NO														
10% NO 80%NO_2														
50% NO 40% NO_2														
70% NO 20% NO_2														
ZERO														

NO_2 Converter

NO_2 GPT Calibrator Test Gas Data									Analyzer Response					
NO_2 Calibration Points	O_3	Ta (°C)	Pa (mmHg)	Dilution Flow		NO Flow		[NO] OUT (ppm)	Bypass [NO] ORIG	No Bypass $[NO_X]$ (ppm)	Bypass $[NO_X]$ (ppm)	$[NO_2]$ impurity (ppm)	X $[NO_2]$ OUT (ppm)	Y $[NO_2]$ CONV (ppm)
				F_D (sccm)	F_{Dest} (sccm)	F_{NO} (sccm)	F_{NOest} (sccm)							
90% NO														
10% NO 80%NO_2														
50% NO 40% NO_2														
70% NO 20% NO_2														
ZERO														

N_T Converter Linear Regression Analysis: $[NO_2]_{out} = X. (N_T - NO_X) = y$

slope = _____, y intercept = _____, Correlation Coefficient = _____

NO_2 Converter Efficiency for N_T Converter = slope $[NO_2]_{out}$ vs $(N_T - NO_X)$ x 100 = _____%

NO_2 Converter Linear Regression Analysis: $[NO_2]_{out} = X. (N_T - NO_X) = y$

slope = _____, y intercept = _____, Correlation Coefficient = _____

NO_2 Converter Efficiency for NO_2 Converter = slope $[NO_2]_{out}$ vs $(N_T - NO_X)$ x 100 = _____%

Figure 4.10-4D.2

Equations Used for NO_2 Converter Efficiency Test by NO_2 GPT (Method 2)

Equation 4.10-1 $F_{Dstd} = (F_D)\ (Pa/760\ mmHg)\ (298\ °K/Ta)$

Equation 4.10-2 $F_{NOest} = (F_{Dstd} \times [NO]_{OUT})/([NO]_{std} - [NO]_{OUT}]$

Equation 4.10-3 $F_{NOstd} = (F_{NO})\ (Pa/760\ mmHg)\ (298\ °K/Ta)$

Equation 4.10-4 $[NO]_{OUT} = ([NO]_{std} \times F_{NOstd})/(F_{NOstd} + F_{Dstd})$

Equation 4.10-13 $[NO_2]_{OUT}$ thru NO_2 converter = $[NO]_{ORIG}$ - X% $[NO_X]$ Bypass

Equation 4.10-14 $[NO_2]_{CONV}$ thru NO_2 converter = $[NO_2]_{OUT}$- (90%[NO] -X% $[NO_X]$ No Bypass)

Equation 4.10-15 $[NO_2]_{OUT}$ thru N_T converter = $[NO]_{ORIG}$ - X%$[N_T]$ Bypass

Equation 4.10-16 $[NO_2]_{CONV}$ thru N_T converter = $[NO_2]_{OUT}$ - (90%[NO]-X%$[N_T]$ No Bypass)

where:

Pa = ambient barometric pressure, mmHg

Ta = ambient gas temperature,°K (273 + °C)

F_D = ambient dilution air flow, ccm

F_{Dstd} = standard dilution air flow, sccm @ 298 °K, 760 mmHg

F_{NOest} = estimated NO cylinder gas flow to calculate specific NO gas concentrations

F_{NO} = ambient NO cylinder gas flow, ccm

F_{NOstd} = standard NO cylinder gas flow, sccm @ 298 °K, 760 mmHg

$[NO]_{std}$ = NO cylinder gas concentration

$[NO]_{OUT}$ = NO calibration gas concentration

$[NO_2]_{OUT}$ = NO_2 calibration gas

$[NO_2]_{CONV}$ thru N_T converter concentration of NO_2 calibration gas converted thru N_T converter

$[NO_2]_{CONV}$ thru NO_2 converter concentration of NO_2 calibration gas converted thru NO_2 converter

Figure 4.10-4D.3

CALCULATION FORM FOR THE METHOD OF LEAST SQUARES

Calibration Point	Concentration, ppm x	x^2	Recorder reading y	y^2	xy
Zero					
80% URL					
60% URL					
40% URL					
20% URL					
10% URL					

$\Sigma x =$ _____, $\Sigma x^2 =$ _____, $\Sigma y =$ _____, $\Sigma y^2 =$ _____, $\Sigma xy =$ _____

$x_{avg.} = \Sigma x/n =$ _____, $y_{avg.} = \Sigma y/n =$ _____, and

n = number of calibration points

The equation of the line fitted to the data is written as:

$$Y = y_{avg.} + b(x-x_{avg.}) = (y_{avg.}-bx_{avg.}) = bx = a + bx,$$

where:

Y = predicted mean response for corresponding x,

b = slope of the fitted line, and

a = intercept where the line crosses the y-axis.

$$b = \{\Sigma xy - [(\Sigma x)(\Sigma y)]/n\}/[\Sigma x^2 - (\Sigma x)^2/n]$$

$$a = y_{avg.} - bx_{avg.}$$

Figure 4.10-5

ACTIVITY MATRIX FOR CALIBRATION PROCEDURES			
Calibration Activities	**Acceptance Limits**	**Frequency and Method of Measurement**	**Action if Requirements Are Not Met**
Calibration gases	US EPA QA Handbook for Air Pollution Measurement Systems, Sec. 2.0.7, Subsec. 7.1.	NO, NH_3, NO_2 Assayed against an NIST-SRM quarterly Method 4.10.2.A also U.S. EPA QA Handbook for Air Pollution Measurement Systems, Sec. 2.0.7	Working gas standard is unstable and/or measurement method is out of control; take corrective action such as obtaining new calibration gas
Dilution gas	Dry zero air, free of contaminants: TAD and US EPA QA Handbook for Air Pollution Measurement Systems, Sec. 2.0.7, Subsec. 7.1.	See 4.10.2.A and B and 4.7.2.B for NO_2	Return to supplier, or take appropriate corrective action with generation system
Multipoint calibration (GPT)	1. $t_R \leq 2$ min PR ≥ 2.75 ppm-min 2. Use calibration procedure in Subsec. 4.7.2.B.2; also TAD and the Federal Register. 3. NO_2 Converter efficiency $\geq 96\%$ 4. $\geq 90\%$ N_T Converter efficiency $\leq 110\%$	Method 1. 4.7.2.B.2.a 2. 4.7.2.B.2.b, TAD, Federal Register 3. 4.7.2.B.2.c	1. Adjust flow conditions and/or reaction chamber; volume to meet suggested limits 2. Repeat the calibration 3. Replace converter & recalibrate the analyzer 4. Replace converter & recalibrate the analyzer

Figure 4.10-6

4.10.3 STANDARD OPERATING PROCEDURES

Essential to quality assurance (QA) are scheduled quality control (QC) checks for verifying the operational status of the monitoring system. The operator should visit the site at least once per week. Every two weeks a Level 1 zero/span QC check must be conducted on the analyzer. In between the Level 1 zero/span checks, Level 2 zero/span QC checks are encouraged to be conducted on the analyzer at a frequency desired by the user. Both Level 1 and Level 2 NO and NH_3 zero/span checks must be conducted at a level between 70 and 90 percent of the analyzer's operating NO/NH_3 measurement range.

NOTE: It is strongly suggested that an automatic system for the remote-controlled activation and recording of Level 1 zero/span checks be installed, so that more frequent (e.g., daily) systematic zero/span checks could be conducted. Checks could then be used to bracket acceptable time blocks of data to limit invalidating larger time blocks of data when the instrumentation malfunctions.

In addition, an independent NO and NH_3 precision check between 16 and 20 percent of the analyzer's full scale operating range must be carried out at least once every two weeks. Figure 4.10-7, at the end of this section, summarizes the QA activities for routine operations. Each activity is discussed in the following subsections.

To provide for documentation and accountability of activities, it is recommended that a checklist be compiled and then filled out by the field operator as each activity is completed. The completed checklist can then be filed with other site operational information (e.g., calibrations, maintenance, etc.) to provide complete documentation for the site. An example checklist is Figure 4.10-8, at the end of this section.

4.10.3.A EQUIPMENT

4.10.3.A.1 MONITORING SHELTER

See section 4.10.1.C for monitoring shelter description and recommendations.

4.10.3.A.2 SAMPLE INTRODUCTION SYSTEM

The sample introduction system consists of:

- an intake port;
- particulate and moisture traps;
- a sampling manifold;
- a sampling blower; and
- a sampling line to the analyzer.

Recommended guidance for design, installation, and maintenance of a sample introduction system can be found in, *USEPA /600/4-77-027a December 1986 Quality Assurance*

Handbook for Air Pollution Measurement Systems: Volume II. Ambient Air Specific Methods, Section 2.02 Sampling Considerations.

As part of the QA program, the field operator should inspect the above components on a predetermined schedule for:

- breakage;
- leaks;
- particulates or foreign matter;
- moisture deposition in sample line or manifold; and
- connection of sample line to sample manifold.

Any component of the sample introduction system that is not within tolerance should be either cleaned or immediately replaced.

4.10.3.A.3 ANALYZER INSPECTION

On each site visit, the field operator should inspect the following external operating parameters of the analyzer. These will vary from instrument to instrument, but in general include the following:

- correct settings of flow meters and regulators
- cycling of temperature control indicators
- temperature level, if equipped with a pyrometer
- analyzer vacuum pump pressure
- verification that the analyzer is in the sampling mode, rather than the zero or the calibration mode
- zero and span potentiometers are locked and set at the proper values.

4.10.3.A.4 CHART RECORDER

During each visit to the monitoring site, the field operator should check the recorder against the following list:

- legibility of the ink trace
- ink supply in the reservoir
- chart paper supply
- chart speed control setting
- signal input range switch
- time synchronization (mark chart with correct time, date, and operator's initials).

At least once per week, the operator must note the exact pen position on the chart paper with a tick mark. Place the time, date, and the operator's initials beside the mark. Due to the variety of strip chart recorders available for use, specific operator instructions for these recorders are not incorporated in this document. Consult the respective manual(s) for each recorder model used.

4.10.3.A.5 SIGNAL AVERAGER

The signal averager time should be checked during each site visit (at least weekly). Document, sign, and date these observations in the station log book.

After a power outage, the signal averager must be cleared and reset on the hour. The average for the previous hour will be lost, so that average (if possible) must be manually averaged from the strip chart. Any changes to the signal averager must be documented in the station log book and on the corresponding section of the chart recorder paper.

Correct any problems so that normal routine operations are reestablished. Sign, date, and document the problems/corrections in the station log book.

NOTE: If an electronic data logger is used in conjunction with a strip chart recorder, a signal averager may not be desirable.

For operational procedures of specific signal averagers, please consult the manufacturer's manual.

4.10.3.A.6 DATA ACQUISITION SYSTEM (DAS)

The DAS should be checked during each site visit (at least weekly) for the following:

- correct synchronization of time
- correct synchronization of date
- any error indicator messages
- DAS is in normal operating mode

Note observations in the site log book and on the corresponding section of the chart recorder. Sign and date these observations.

Correct any problems so that normal routine operations are reestablished. Sign and date the documented problems/corrections.

For operational procedures of a specific DAS, please consult the manufacturer's manual.

4.10.3.A.7 ZERO AIR

The zero air system should be visually inspected during each site visit and serviced as needed.

4.10.3.A.8 GAS CYLINDER PRESSURE

Once per week, note and record the span and precision NO and NH_3 gas tank pressures in the station log book.

If the pressure for either the span NO and NH_3 gas tanks or precision NO and NH_3 gas tanks are below 300 psig, the tank should be replaced with a gas tank of higher pressure. A new gas tank should be ordered when the respective gas tank pressure falls to 500 psig. When a span gas tank is changed, the new span gas concentration must be checked with the analyzer's calibrated output (DAS, chart recorder) for verification of the specified span gas concentration.

4.10.3.B QUALITY CONTROL (QC) PERFORMANCE CHECKS

Zero, NO, and NH_3 span checks are required to document within-control conditions. The purpose of the zero and span check is to provide interim checks on the response of the instrument to known concentrations. If an analyzer's response falls outside of the prescribed limits, the analyzer is out-of-control, and the cause must be determined and corrected. A quality control chart should be used to provide a visual check to determine:

1. if the analyzer is within control conditions;

2. the trend of the analyzer's bias so corrections can be planned and made to improve precision control over the NH_3 measurement process before an out-of-limits situation occurs. Please refer to *Quality Assurance Handbook for Air Pollution Measurement Systems*, Volume 1, Principles, Appendix H, Control Charts, EPA-600/9-76-005, for specifics on the use of control charts.

Every two weeks, a level 1 zero/span check must be made on the analyzer (sec. 4.10.3.B.1). Level 2 zero/span checks (sec. 4.10.3.B.2) should be conducted between the level 1 zero/span checks at a frequency desired by the user.

Standards used for multipoint calibration may be used for conducting span checks.

It is essential that the same NO and NH_3 gases be used each time a zero/span check is conducted. This allows a means to track the analyzer's reliability to measure its response to the same gas repeatedly introduced over a continuous long-term period.

Figure 4.10-9 (NO and NH_3 Zero/Span Drift Control Limits) summarizes the required quality control actions for the use of zero and span checks to determine NH_3 analyzer calibration control. This figure is at the end of this section.

4.10.3.B.1 LEVEL 1 ZERO/SPAN CHECK

A level 1 NO and NH_3 zero/span check must be conducted every two weeks. An NO and NH_3 gas used for the multipoint calibration may be used to conduct a level 1 zero/span check.

For a level 1 zero/span check, the analyzer should be operating in its normal sampling mode with the test concentrations passing through as much of the inlet and sample conditioning system as is practicable. Wet or dirty inlet lines can cause changes in the NH_3 pollutant concentrations. Efforts should be made to introduce the span gas into as much of the sample train as possible. **The span gas must pass through all sample conditioning components used in the sample train, e.g., all in-line filters.** The calibration response can then be compared to the response when the span concentration is introduced at the analyzer, downstream of the sample inlet components, as a check of the entire sample inlet system.

NO span gas and NH_3 span gas must be separately introduced into the NH_3 measurement system. These gas concentrations must be within 70 to 90 percent of the analyzer's measurement range. In addition, the NH_3 span gas is to be nearly identical to the NO span gas concentration. The analyzer's response to the NH_3 gas must be within ±10 percent of the analyzer's response to the NO gas. If not, it is probable that insufficient NH_3 is being oxidized to NO, and the slope of a multipoint calibration of NH_3 gas vs. the N_T channel may not be within ±10 percent of the slope of a multipoint of NO gas vs. the N_T channel. If this is the situation, the analyzer must be repaired, recalibrated, and the respective data invalidated.

No adjustment(s) to the analyzer may be made immediately prior to, or during, the zero and span calibration. Analyzer response readings must be obtained "as is" before any adjustments are made to the analyzer. These unadjusted zero and span readings provide valuable information for:

- confirming the validity (or invalidating) the measurements obtained immediately preceding the calibration
- monitoring the analyzer's calibration drift
- determining the frequency of recalibration

To conduct a level 1 zero and span check, perform the following:

1. Disconnect the analyzer's inlet from the ambient sample probe at the junction of the probe manifold and the sample line, and connect it to the NO span gas cylinder (or if a gas dilution calibration system is used, the NO gas dilution calibration system). Ensure a suitable atmospheric dump is in line. Leave the analyzer in its normal sampling mode. Make no other adjustments to the analyzer;

2. Sample and measure the span test concentration and record the unadjusted, stable ("as is") span response reading in the station log book, on the strip chart recorder, on span check data form/figure 4.10-10 (at the end of this section), and on an X-S control chart (refer to EPA's *Quality Assurance Handbook for Air Pollution Measurement Systems*, Volume 1, Principles, Appendix H, Control Charts, EPA-600/9-76-005) used for recording level 1 zero/span checks;

3. Sample and measure the zero test concentration standard and record the unadjusted, stable zero reading in the station log book, on the strip chart recorder, on the NO/NH_3

span check data form (figure 4.10-10, at the end of this section), and on an X-S control chart used for recording level 1 zero/span checks;

4. Repeat steps 1 through 3 using NH_3 span gas;

5. Perform any needed analyzer adjustments (flow, pressure, etc.) or analyzer maintenance;

6. If adjustment of the zero is needed or if any adjustments have been made to the analyzer, adjust the zero to the desired zero reading. Offsetting the strip chart zero reading (e.g., to 5 percent of scale) may help to observe any negative drift that may occur. Record the adjusted stable zero reading in the station log book, on the strip chart recorder, and on X-S control chart used for recording level 1 zero/span checks;

7. Sample and measure the span test concentration. If span adjustment is needed, adjust the span response to the desired value, allowing for any zero offset used in the previous step. Record the final adjusted, stable span reading in the station log book, on the strip chart recorder, and on an X-S control chart used for recording level 1 zero/span checks;

8. If any adjustments were made to the zero, span, or other parameters, or if analyzer maintenance was carried out, allow the analyzer to restabilize at the new settings, then recheck the zero and span readings. Record the new zero/span settings, as well as the actual zero and span readings on the chart recorder, on the X-S control chart, and in the station log book.

   When the response from a span check is outside the control limits, the cause of the extreme drift should be determined and the appropriate corrective action(s) taken. Some of the causes for drift are listed below:

   a. lack of preventive maintenance
   b. fluctuations in the electrical power supply
   c. fluctuations in flow
   d. changes in zero air source
   e. change in span gas concentration
   f. degradation of photomultiplier tube
   g. electronic and physical components not within manufacturer's specifications
   h. high-temperature thermal oxidizer converting insufficient NH_3 to NO

For specific and detailed corrective actions to be taken, please consult the manufacturer's instruction/operations manual.

4.10.3.B.2 LEVEL 2 ZERO/SPAN CHECK

A Level 2 zero/span check is an unofficial quality control check of an analyzer's response. A level 2 zero/span check is recommended only with NH_3 gas. Level 2 zero/span checks should be conducted on a more frequent and pre-determined schedule between level 1 zero/span checks. Conduct level 2 zero/span checks in the same manner as level 1 zero/span checks, however, it may include dynamic checks made with uncertified test concentrations, artificial stimulation of the analyzer's detector, electronic, or other types of checks of a portion of the analyzer, etc. Note that DAS-reported NH_3 concentrations have an inherent bias since the reported NH_3 concentration is based on the instrument response to NO gas. For purposes of evaluating NH_3 span checks, one should recall the ±10 percent criteria and any changes in span gas response since initial calibration.

Level 2 zero and span checks are not to be used as a basis for analyzer zero or span adjustments, calibration updates, or adjustment of ambient data. They are intended as quick, convenient checks to be used between zero and span calibrations to check for possible analyzer malfunction or calibration drift. Whenever a Level 2 zero and span check indicates a possible calibration problem, a Level 1 zero and span (or a multipoint) calibration should be conducted before any corrective action is taken.

If a Level 2 zero and span check is to be used in the quality control program, a reference response for the check must be obtained immediately following a zero and span (or multipoint) calibration while the analyzer's calibration relationship is accurately known. Subsequent Level 2 check responses are compared to the most recent reference response to determine if a change in response has occurred. Like level 1 zero/span checks, all level 2 zero and span checks are recorded/plotted on a zero/span check form (figure 4.10-10) and on an X-S quality control chart.

NOTE: Keep in mind that any Level 2 check that involves only part of the analyzer's measurement system cannot provide information about the portions of the system not checked and, therefore, cannot be used as a verification of the overall analyzer's calibrated measurement system.

Conduct Level 2 zero/span checks as Level 1 zero/span checks, except make no adjustments to the analyzer's calibration without verification by a Level 1 zero and span or multipoint calibration. It is further recommended that level 2 zero/span checks be automated to remotely activate every 24 hours.

DAILY ACTIVITY MATRIX			
Characteristics	**Acceptance Limits**	**Frequency and Method of Measurement**	**Action if Requirements Are Not Met**
Shelter temperature	Mean temperature between 15 to 30°C, daily fluctuations not greater than ±2°C (4°F)	Edit thermograph chart daily for variations greater than ±2°C (4°F)	1. Mark strip chart for the affected time period 2. Repair of adjusted temperature control system
Sample introduction system	No moisture, foreign material, leaks, obstructions; sample line connected to manifold	Weekly visual inspection	Clean, repair, or replace as needed
Recorder	1. Adequate ink supply and chart paper 2. Legible ink traces 3. Correct settings of chart speed and range switches 4. Correct time	Weekly visual inspection	1. Replenish ink and chart paper supply 2. Adjust recorder time to agree with clock; note on chart
Analyzer operational settings	1. Flow and regulator indicators at proper settings 2. Temperature and presssure indicators cycling or at proper levels 3. Analyzer set in sample mode 4. Zero and span controls locked	Weekly visual inspection	Adjust or repair as needed
Analyzer operational check	Zero/span checks within tolerance limits as described in Subsec 4.10.3.B.1	Level 1 zero/span checks every 2 weeks; Level 2 between Level 1 checks at frequency desired by user.	1. Isolate source of error, and repair 2. After corrective action, recalibrate analyzer
Precision check	Assess precision as described in Sec. 4.10.7.A	Every 2 weeks, Subsection 4.10.7.A	Calculate, report precision, U.S. EPA QA Handbook for Air Pollution Measurement Systems, Sec 2.0.8

Figure 4.10-7

OPERATIONAL CHECKLIST

Site ID _____ Date _____

Site Location _____ Technician _____

Site Address _____

1. Inspect thermograph for temperature variations greater than ±2°C (4°F). Identify time frame of any temperature level out of tolerance.

Comments: _____

_____

2. Inspect sample introduction system for moisture, particulate buildup, foreign objects, breakage, leaks.

Comments: _____

_____

3. Is sample line connected to manifold?

Comments: _____

_____

4. Inspect data recording system

	OK	Corrective Action Taken
○ Legibility of trace	_____	_____
○ Ink supply	_____	_____
○ Paper supply	_____	_____
○ Chart speed selector	_____	_____
○ Signal range switch	_____	_____
○ Time synchronization	_____	_____

Comments: _____

_____

5. Inspect analyzer operational parameters

○ Sample flowrate	_____	_____
○ Oven temperature light flashing	_____	_____

Figure 4.10-8A

OPERATIONAL CHECKLIST (continued)

	OK	Corrective Action Taken
◦ Analyzer in sample mode	_____	_____
◦ Zero and span potentiometers locked at correct setting	_____	_____

Comments: _____

6. Zero the analyzer
7. Is unadjusted zero within tolerance?

Comments: _____

8. Span the analyzer
9. Is unadjusted span within tolerance?

Comments: _____

10. Enter zero and span values on span check data form
11. Return to sample mode
12. Record cylinder pressure of zero and span tanks

    Zero air _____
    Span air _____

13. Close valve on zero and span tanks.

Signature _____ Date _____

Figure 4.10-8B

NO and NH_3 ZERO/SPAN DRIFT CALIBRATION LIMITS

ZERO DRIFT (% of range)		SPAN DRIFT (% of span)
> +5%	Invalidate data; adjust and recalibrate analyzer	> +25%
+5%		+25%
	Adjust and recalibrate analyzer	
+3%		≤ +15%
	Normal analyzer range Adjustment optional	
+1%		+5%
0%	Analyzer adjustment not recommended	0%
-1%		-5%
	Adjustment optional	
-3%		≤ -15%
	Adjust and recalibrate analyzer	
-5%		-25%
> -5%	Invalidate data; adjust and recalibrate analyzer>	> -25%

Figure 4.10-9

NO/NH_3 SPAN CHECK DATA FORM

Analyzer Make/Model Serial Number _____

Location Address _____

Standard Used Concentration _____

Date of certification Certified by _____

Make/Model Calibrator Serial Number _____

Date	Technician	unadj. zero (ppm)	[NO] span std. (ppm)	$[NH_3]$ span std (ppm)	unadj. span [NO] (ppm)	unadj. span $[NH_3]$ (ppm)	unadj. span $[N_T]$ (ppm)

Figure 4.10-10

PRECISION CHECK FOR NO/NH_3

Analyzer Make/Model Serial Number _____

Location Address _____

Standard Used Concentration _____

Date of certification Certified by _____

Make/Model Calibrator Serial Number _____

Date	Technician	[NO] prec. std. (ppm)	[NH_3] prec. std (ppm)	Analyzer [NO] (ppm)	Analyzer [NH_3] (ppm)	Analyzer [N_T] (ppm)

Figure 4.10-11

4.10.4 PREVENTIVE MAINTENANCE

Because preventive maintenance requirements vary from instrument to instrument, the manufacturer's manual should be consulted for a specific analyzer. From these instrument-specific maintenance requirements, a suitable preventive maintenance schedule should be developed for each instrument. A detailed preventive maintenance record of the preventive actions taken on each analyzer must be documented. This documentation must be kept on file at the site to identify recurring malfunctions.

A maintenance log appears in figure 4.10-12.

MAINTENANCE LOG

Analyzer Make/Model Serial Number
Location Address

Date	Technician	Event Initiating Maintenance	Maintenance Activity	Comments

Figure 4.10-12

4.10.5 AUDIT PROCEDURES

The quarterly audit is the responsibility of the agency conducting the monitoring program. At any time, ADEC may choose to conduct oversight audits of a monitoring project. Chapter 5 of the *Alaska Quality Assurance Manual for Ambient Air Quality Monitoring* is devoted to this subject.

An audit is an independent assessment of the accuracy of data generated by an ambient air analyzer or a network of analyzers. Independence is achieved by having the NH_3 audit performed by an operator (trained and experienced in the NH_3 method he or she will be auditing) other than the operator conducting the routine field measurements and calibrations. The operator must use audit standards, reference materials, and equipment different from those routinely used in monitoring.

The audit is an assessment of the measurement process under normal operations; that is, without any special preparation or adjustment of the system. Routine quality assurance checks conducted by the operator are necessary for obtaining and reporting good quality data, but they are not part of the auditing process.

Proper implementation of an auditing program will ensure the integrity of the data and assess the accuracy of the data.

4.10.6 DATA ACQUISITION, PROCESSING, and REPORTING

Ammonia data is acquired from analyzers by data acquisition systems (DAS) or by strip chart recorders. **If a DAS is used, a strip chart recorder must also be employed to capture the same data.** Additionally, if the DAS is to be used as the primary data record, 7 percent of reduced strip chart data must be compared against the corresponding DAS-acquired data. Processed raw data is forwarded to the agency program or project manager from their station manager(s).

Program and project managers are responsible for:

1. acquiring all processed raw data;

2. processing the data (and all other relevant site information) in SAROAD or AIRS report format;

3. certifying the integrity and validity of the reported data, including a report on reasons for missing or invalid data; and

4. reporting the data on a quarterly basis to the ADEC air quality data base manager. The data is to be provided on magnetic media to avoid additional data entry errors.

4.10.6.A DATA VALIDATION

Monitoring data of poor quality may be worse than no data. Data validation is one activity of a QA program to screen data for possible errors or anomalies. The following data validity checks should be applied to identify gross anomalies:

4.10.6.A.1 SPAN DRIFT CHECK

The first level of data validation should be to accept or reject monitoring data based upon routine periodic analyzer checks. It is recommended that results from the level 1 zero and span checks be used as the first level of data validation for accepting data. This means that up to two weeks of monitoring data may be invalidated if either an NH_3 or NO level 1 span drift is equal to or greater than ±25 percent, or if zero drift is equal to or greater than ±5 percent of the measurement range. For this reason, it is recommended that level 2 zero and span checks be conducted more frequently than the bi-weekly requirement.

4.10.6.A.2 HOURLY AVERAGE

Hourly Average--A minimum of 45 minutes of valid data are required to report an hourly average concentration. Figure 4.10-13, "Data Form for Recording Hourly Averages," may be found at the end of this section.

Note: **POWER OUTAGE AND FAILURE OF HIGH TEMPERATURE CONVERTER**
To attain an acceptable NH_3 to NO conversion, it is essential for the high-temperature converter to maintain a proper operating temperature. For this reason, power outages lasting more than 15 minutes will require all associated data to be invalidated until one hour after full power returns to the site. However, if upon full power being restored a temperature recorder that monitors actual converter temperature indicates the temperature converter has not fallen below 10 percent of the operating temperature set point, data may not need to be invalidated (with respect to converter temperature).

4.10.6.A.3 EDIT OF STRIP CHART

The station operator has the primary responsibility for distinguishing valid measurements from indications caused by malfunctioning instruments or source interferences.

Data editing will be greatly enhanced if the station operator is conscious of several aids in chart review. These are listed below:

a. familiarity with typical diurnal, daily, seasonal, or wind direction-specific concentration variations (e.g., the times maximum concentrations occur);

b. familiarity with the type of instrument malfunctions which cause characteristic trace irregularities;

c. cyclical or repetitive variations (at the same time each day or at periodic intervals during the day) may be caused by excessive line voltage or temperature variations. Nearby source activity can also cause erroneous/non-representative measurements;

d. traces showing little or no activity may indicate a loss of sensitivity, flow problems, or sample line leaks;

e. a wide, solid trace indicating excessive noise or spikes that are sharper than is possible with the normal instrument response time are indicative of erratic behavior. Noisy outputs usually result when analyzers are exposed to vibration sources or loose cable connections;

f. a long, steady increase or decrease in deflection;

g. a trace that drops below the zero baseline during certain periods; this may indicate a larger-than-normal drop in the ambient room temperature or the power line voltage. This may also indicate contaminant(s) in the zero air;

h. Enter meaningful notes on the charts. **The more information that can be provided, the more valuable the strip charts will be.** Draw an arrow from each note to the area of the chart discussed. For example, notes should include:

   a. the causes of, or comment on, irregularities in the trace, e.g., changes in zero from day to day, sudden changes in the trace, flow errors, or corrective actions;

   b. checks and/or adjustments to the analyzer(s);

   c. span drift equal to or greater than ±25 percent of the chart;

   d. zero drift equal to or greater than ±5 percent of the chart; and

   NOTE: Data must be flagged or voided for any time interval in which a malfunction of the sampling system is detected.

4.10.6.B DATA REDUCTION

Data can be reduced either manually or automatically. Automatic data reduction is done by DAS that are programmed at the time of the analyzer's multipoint calibration.

4.10.6.B.1 WITH SIGNAL AVERAGER

Note: When strip charts are used in conjunction with a DAS system (each calendar quarter), at least 7% of the strip chart must be reduced and compared against the DAS reported data.

a. Use of a signal averager is recommended to facilitate data reduction. The signal averager provides an average for each hour that is recorded by the chart recorder

and data logger. The average shown by the signal averager always indicates the output of the analyzer, including any zero, span, or precision checks. The hourly average concentration may be obtained from the strip chart by the method explained in the following section (4.10.6.B.2), "Without Use of Signal Averager."

b. All hours in which a precision check was performed must be manually averaged to exclude the period precision gas was sampled through the ambient port of the analyzer.

NOTE: Use of the term "signal averager" refers solely to a stand-alone unit such as the Monitor Lab's 8640.

c. The hours in which a zero-span was performed by the operator may have to be edited manually to exclude the zero span period from the sample average. There must be at least 45 minutes of sample time to form a valid hourly average.

NOTE: Complete data reduction documentation must be maintained on the strip chart recorder. The analyst's name and the date the data reduction took place must be included.

d. Fill in the identification data called for at the top of Figure 4.10-13, "Data Form for Recording Hourly Averages."

e. Read the hourly signal averaged deflection (% chart) for all of the hourly intervals for which data have not been marked invalid, and record all values on the hourly averaged data form in the column headed "Reading - Original (Orig)." Ignore the columns marked "Zero Baseline," "Difference," and "y, add + 5."

f. Convert "Reading - Orig" values (% chart) to concentrations (ppm) by using the most recent NO/NH_3 calibration curve, and record the concentrations in the last column of Figure 4.10-13, "Data Form for Recording Hourly Averages."

4.10.6.B.2 WITHOUT USE OF SIGNAL AVERAGER

Note: When strip charts are used in conjunction with a DAS system (each calendar quarter), at least 7% of the strip chart must be reduced and compared against the DAS reported data.

Hourly average concentrations from a strip chart record may be obtained by the following procedure:

a. Make sure the strip chart record has a zero trace at the beginning and end of the sampling period;

b. Fill in the identification data called for at the top of data form (Figure 4.10-13), "Data Form for Recording Hourly Averages";

c. Draw a line from the zero baseline at the start of the sampling period to the zero baseline at the end of the sampling period by using a straight edge;

d. Read the zero baseline (% chart) at the midpoint of each hourly interval, and record the value on the data form (Figure 4.10-13), "Data Form for Recording Hourly Averages";

e. Determine the hourly averages by placing a transparent straight edge parallel to the horizontal chart division lines. Adjust the straight edge between the lowest and highest points of the trace in the interval between two vertical hour lines of interest so that the area above the straight edge, and bounded by the trace and the hour lines, is approximately equal to the area below the straight edge and bounded by the trace and hour lines;

f. Read the deflection (% chart) for all of the hourly intervals for which data have not been marked invalid, and record all values on the hourly average data form in the column headed "Reading - Original (Orig.)";

g. Subtract the zero baseline value from the reading value and record the difference;

h. Add the percentage of zero offset, if applicable, to each difference;

i. Convert reading values (% chart) to concentrations (ppm) by using the most recent NH_3 calibration curve from the N_T channel output of the instrument, and record the concentrations in the last column of the "Data Form for Recording Hourly Averages" (figure 4.10-13);

j. An alternative method of converting % chart to ppm is to eliminate steps f through h and to use equation 4.10-17:

$$ppm = (y - y_z)/slope \qquad \text{Equation 4.10-17}$$

where: y = recorder reading in % scale (from step d)

y_z = zero baseline in % scale (from step e)

slope = slope of the calibration relationship (from section 4.10.2.B)

DATA FORM FOR RECORDING HOURLY AVERAGES

Site Location _____ Operator _____

Address _____ Checker _____

Analyzer Make/Model _____ Serial Number _____

Recorder Make/Model _____ Serial Number _____

Calibration Curve, Slope(m) = _____ Intercept(b) = _____ x=(y-b)/m _____

date	hour	reading		zero baseline		difference		y, add + 5		$[NH_3]$, ppm	
		orig.	check	orig	check	orig.	check	orig.	check	orig.	check

Figure 4.10-13

4.10.6.C DATA QUALITY CONTROL

To ensure that only reliable, accurate, complete, representative, and comparable data is reported to the ADEC Air Program data base manager, the following quality control (QC) activities will be performed on each set of reported data:

1. Check 7 percent of the data for transcription error. If a transcription error is found, correct the problem. Recheck all data in the respective data batch for transcription correctness. Document the problem(s) and the appropriate corrective action(s) taken to report reliable data;

2. Randomly recalculate 7 percent of all data. Recalculations must agree within a round-off error of the original sample calculation. If not, recalculate all data in the respective data batch. Correct any error(s). Document the problem(s) and the appropriate corrective action(s) taken to report reliable data;

3. Conduct a level 1 zero/span NO and NH_3 check at a minimum of once every two weeks. The analyzer's response to the span check concentrations must be within ±15 percent of the NO and NH_3 span check standard concentrations, and zero must be within ± 3% of the measurement range. Additionally, the analyzer's N_T response to the NH_3 span check must be within ±10 percent if the analyzer's N_T response to the NO span check. If the level 1 span check fails any of the above requirements:

   a. identify and correct the problem;

   b. recalibrate the NH_3 analyzer as soon as possible. If, however, the level 1 span check results are outside ±25.0 percent of the NO and/or NH_3 span check, or zero drift is > ± 5% of the analyzer full scale range, then all data must be invalidated to the last acceptable span check or multipoint calibration. The NH_3 analyzer must also be recalibrated before being used to collect data; and

   c. document the problem(s) and the corrective action(s) taken to return the NH_3 analyzer to acceptable routine operations;

4. Conduct a precision check at a minimum of once every two weeks. The analyzer's response to the precision check NH_3 concentration must be within ± 15 percent of the NH_3 precision check standard concentration. If the precision check fails the above requirement, conduct a level 1 zero/span check to substantiate the problem and take the necessary corrective action(s) to return the NH_3 analyzer to acceptable routine operations (See Figure 4.10-9 for NO and NH_3 zero/span Drift Calibration Limits); and

5. Visually inspect all sample information data/documentation sheets. Ensure all necessary information is recorded and complete.

4.10.6.D STATISTICAL TRACKING

All equipment must be maintained with current up-to-date log books. All repairs, maintenance, calibrations, etc., must be recorded, signed, and dated.

The program or project manager will ensure that the following X-S charts are maintained and up to date:

1. Level 1 NO and NH_3 zero/span checks
2. Level 2 NH_3 zero/span checks
3. NH_3 precision checks
4. Recertifications of calibration gas standards (NH_3 and NO).

NOTE: Please refer to *Quality Assurance Handbook for Air Pollution Measurement Systems*, Volume 1, Principles, Appendix H, Control Charts, EPA-600/9-76-005, for directions on establishing and maintaining control charts.

4.10.6.E DATA REPORTING

NH_3 information and hourly average data is transcribed from the hourly averages form to an AIRS/SAROAD hourly data form. (See *Quality Assurance Handbook for Air Pollution Measurement Systems*, Volume 2, sec. 2.03, EPA-600/9-76-005, for details and basic instructions for filling out the SAROAD.)

The AIRS/SAROAD parameter code for NH_3 is 42604. Since, there is currently no designated reference method code for ammonia, use the method code for NO_2.

NH_3 information and hourly averages from data acquisition systems may also be polled and processed into AIRS/SAROAD format by computer with the appropriate computer software. However, data reduced and reported in this manner must be verified against a 7 percent random strip chart data reduction check. Also, any NH_3 concentration anomalies reported by the DAS must be compared against the strip chart recorder-reduced data. Differences between reported DAS-collected data and strip chart recorder-collected data should agree within 4% of full scale analyzer response (e.g., 0.6 ppm for a 0-14 ppm analyzer range). If obvious differences are noted between the two collection systems, all data back to the last acceptable level 1 zero/span check or precision check must be examined by both systems. The reason(s) for the difference(s) must be investigated, corrected, and documented. The appropriate sections of collected data that do not meet data validation requirements must be invalidated. Other questionable data should be flagged and reported to the local data base manager. It is incumbent upon the local and/or ADEC data base manager to decide whether to include the flagged data in ADEC's air monitoring data base.

Quarterly data reports submitted to the Department must include (but not be limited to) the following QA documentation:

1. All valid or flagged one- and eight-hour averages (from all channels used to calculate and report NH_3 data);

2. Minimum and maximum one- and eight-hour averages and other summary statistics for all reported parameters (e.g., NH_3, N-, NO_x);

3. Data which has exceeded the full scale range of the analyzer shall be flagged and manually verified against strip chart recorder output. Copies of verified strip chart(s) shall be made available to the Department upon request;

4. Reasons for each hour of missing/invalid/flagged data shall be identified and explained;

5. Details of all maintenance activities and any changes to instrument and standard operating procedures;

6. Results of all pre-calibration checks and unadjusted zero/span checks (from all channels used to report data);

7. Results of all analyzer calibrations (from all channels used to report data);

8. Results of all NO_2 and NH_3 converter efficiency checks (from all channels used to report data);

9. Copies of calibration and equipment standards used for calibrations, calibration checks, and audits;

10. Results of all calibration flow checks; and

11. All final analyzer potentiometer (and other instrument) settings for all calibrations and zero/span checks.

4.10.7 ASSESSMENT OF MONITORING DATA FOR PRECISION AND ACCURACY

4.10.7.A PRECISION

Precision checks must be conducted at least every two weeks. To conduct bi-weekly precision checks, an independent NO and NH_3 gas source (between 16 percent and 20 percent of analyzer full-scale operating range) is required. In addition, the NH_3 span gas is to be nearly identical to the NO span gas concentration. The test gas must be introduced into as much of the sample train as possible. The test gas must pass through all filters used in the sample train. The analyzer's response to the NO precision gas must be within ±15 percent of the NO precision gas true value. The analyzer's response to the NH_3 precision gas must be within ±15 percent of the NH_3 precision gas true value.

The analyzer's N_T response to the NH_3 gas must be within ±10 percent of the analyzer's N_T response to the NO gas. If not, insufficient NH_3 is being oxidized to NO, and a level 1 zero span check must follow to verify the analyzer's performance before corrective action may be taken. These bi-weekly precision check values will be used to determine single instrument precision gas, as described in 40 CFR 58, Appendices A and B.

It is essential that the same NO and NH_3 gases be used each time a precision check is conducted. This allows a means to track the NH_3 analyzer's calibration stability. All precision

check results must be documented. It is strongly recommended that ongoing quality control (QC) X-S charts be maintained to document precision check result trends for the NH_3 analyzer. For more information on QC charts, please refer to *Quality Assurance Handbook for Air Pollution Measurement Systems*, Volume 1, Principles, Section H, Control Chart, EPA-600/9-76-005.

No adjustment(s) to the analyzer may be made during or prior to a precision check. Analyzer response readings must be obtained "as is."

To conduct an NO precision check, perform the following:

1. Disconnect the analyzer's inlet from the ambient sample probe at the junction of the probe manifold and the sample line, and connect it to the NO precision gas tank (or if a gas dilution calibration system is used, the NO gas dilution calibration system), at atmospheric pressure. Leave the analyzer in its normal sampling mode. Make no other adjustments to the analyzer;

2. Sample and measure the precision test concentration and record the unadjusted, stable ("as is") response reading in the station log book, on the strip chart recorder, on an X-S control chart, and on "Precision Check for NO/NH_3" form (figure 4.10-11);

To conduct an NH_3 precision check, perform the following:

1. Disconnect the analyzer's inlet from the ambient sample probe at the junction of the probe manifold and the sample line, and connect it to the NH_3 precision gas tank (or if a gas dilution or permeation calibration system is used, the NH_3 gas dilution/permeation calibration system) at atmospheric pressure. Leave the analyzer in its normal sampling mode. Make no other adjustments to the analyzer;

2. Sample and measure the precision test concentration and record the unadjusted, stable ("as is") response reading in the station log book, on the strip chart recorder, on an X-S control chart, and on "Precision Check for NO/NH_3" form (figure 4.10-11);

4.10.7.B ACCURACY

The accuracy of the NH_3 analyzer is assessed by auditing the performance of the analyzer as described previously in section 4.10.5. The audit gas values and the corresponding analyzer-measured values are reported. The percentage differences between these values are used to calculate accuracy as described in 40 CFR 58, Appendices A and B.

4.10.8 DATA QUALIFICATION

Ambient measurement data cannot be considered representative of actual field conditions for a calendar quarter period unless the hourly data capture was greater than 75 percent of the possible number of hourly periods. For any reporting periods where there is missing data, quarterly data reports must be accompanied by a "missing data" report. The missing data reports must identify:

- the reasons for missing data, and
- the appropriate corrective action(s) that were taken to return data reporting to acceptable levels of completeness.

4.10.9 DATA SUBMISSION

NH_3 data will be reported on a quarterly basis. The data will be reported on magnetic media with a hard copy back-up. Quarterly reports will be submitted within a time period specified by the data base manager, but no later than two months following the end of the respective quarter. Independent projects performed in support of a permit application may not be required to submit quarterly reports.

NH_3 information and hourly averages from data acquisition systems may also be polled and processed into SAROAD/AIRS format by computer with the appropriate computer software. However, data reduced and reported in this manner must be verified against a 7 percent random strip chart data reduction check. Also, any NH_3 concentration anomalies reported by the DAS must be compared against the strip chart recorder reduced data. Differences between reported DAS collected/reduced data and strip chart recorder collected/reduced data should agree within 4% of the analyzer's calibrated full scale range (e.g., 0.6 ppm for a 0-14 ppm range). If obvious differences are noted between the two collection/reporting systems, all data back to the last acceptable Level 1 zero/span check must be examined by both systems. The reason(s) for the difference(s) must be investigated, corrected, and documented. The appropriate sections of collected data that do not meet data validation requirements must be invalidated. Other questionable data should be flagged and reported to the local agency data base manager. It is incumbent upon the local and/or ADEC data base manager to decide whether to include the flagged data in ADEC's air monitoring data base.

Quarterly data reports submitted to the Department must include (but not be limited to) the following QA documentation:

1. All valid or flagged one-hour averages (from all channels used to calculate and report NH_3 data);
2. Minimum and maximum one- and eight-hour averages and other summary statistics for all reported parameters;
3. Data which has exceeded the full scale range of the analyzer shall be flagged and manually verified against strip chart recorder output. Copies of verified strip chart(s) shall be made available to the Department upon request;
4. Reasons for each hour of missing/invalid/flagged data shall be identified and explained;
5. Details of all maintenance activities and any changes to instrument and standard operating procedures;

6. Results of all pre-calibration checks and unadjusted zero/span checks;

7. Results of all analyzer calibrations;

8. Results of all NO_2 and NH_3 converter efficiency checks;

9. Copies of calibration and equipment standards used for calibrations, calibration checks, and audits;

10. Results of all calibration flow checks; and

11. All final analyzer potentiometer (and other instrument) settings for all calibrations and zero/span checks.

4.7.10 EQUIPMENT DE-INSTALLATION

When an NH_3 monitoring site is to be shut down, the functions listed below are highly recommended. If the site is to be permanently shut down, a final performance and systems audit is to be performed. If the site is to be a seasonal shutdown only, a performance audit should be performed prior to the shutdown, but certainly within the final calendar quarter of instrument operation.

1. Conduct a final Level 1 zero/span check to validate the last portion of collected data.

2. Log the date, time, zero/span values, zero and span potentiometer values, and any other pertinent information, on the operator logsheet.

3. Turn off and unplug the NH_3 analyzer (consult the respective manufacturer's operating manual).

4. Turn off and shut down the permeation device gas calibrator (consult the respective manufacturer's operating manual).

5. Turn off and shut down the gas calibrator (consult the respective manufacturer's operating manual).

6. Turn off and shut down the data logger (consult the respective manufacturer's operating manual).

7. Turn off and shut down the signal averager and chart recorder (consult the respective manufacturer's operating manuals).
8. Turn off and shut down the zero air system (consult the respective manufacturer's operating manual).

9. Turn off and shut down the power conditioning system (consult the respective manufacturer's operating manual).

10. Close gas tank valves for precision gas tank, span gas tank, zero air tank (if applicable), and calibration gas tank. Remove pressure regulators and replace with twist caps for safety transportation.

4.10.11 SAFETY PROCEDURES

The following basic safety precautions should be taken while working with ammonia instrumentation.

1. Operate all monitoring instruments with a grounding plug (3-wire plug).

2. Exhaust the analyzer safely, especially when calibrating the unit with high NH_3 concentrations and during the span gas standardization.

3. When working on, troubleshooting, or repairing any electrical instrument, the power should usually be turned off and the power line disconnected.

4. Take normal precautions for shock protection and prevention when working inside of any electrical instrument with the power connected.

5. Ensure that all high-pressure gas tanks (zero, span, and precision) are securely chained or otherwise attached to something solid so that the tanks remain in an upright position at all times.